BD2-2000-0000

V10 combination unit

Product code: BD2-2000-0000

IP rating **IP44**	Material **ABS**
Socket option **without sockets**	Weight (g) **881**



Specification	Value
Product code	BD2-2000-0000
Barcode	8698523901014
IP rating	IP44
Material	ABS
Socket option	without sockets
Weight (g)	881
Box quantity	1
Carton quantity	6

Technical drawing

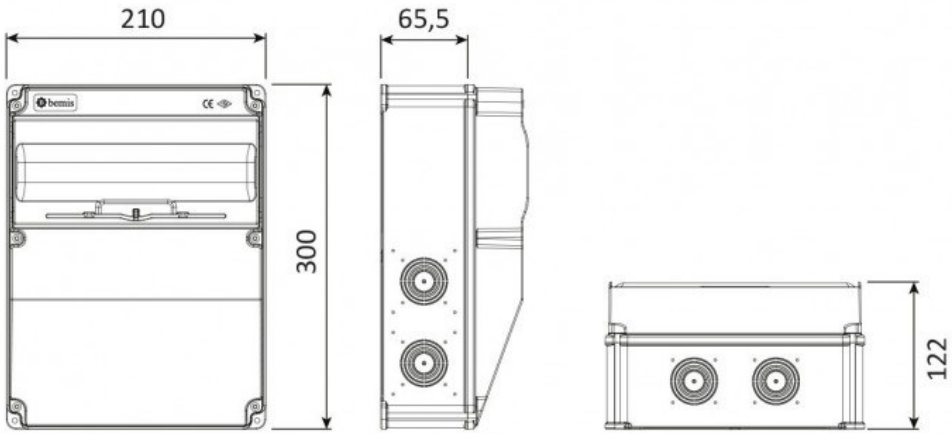

Technical values reflect the current product catalogue. Contact Bemis for installation documentation and confirmation of application suitability.