BH5-6130-0000

# V7 combination unit

Product code: BH5-6130-0000

| | |
|---|---|
| IP rating<br>**IP66** | Material<br>**ABS Halogen Free** |
| Socket option<br>**with sockets** | Box quantity<br>**1** |



| Specification | Value |
|---|---|
| Product code | BH5-6130-0000 |
| Barcode | - |
| IP rating | IP66 |
| Material | ABS Halogen Free |
| Socket option | with sockets |
| Weight (g) | - |
| Box quantity | 1 |
| Carton quantity | 12 |

## Technical drawing

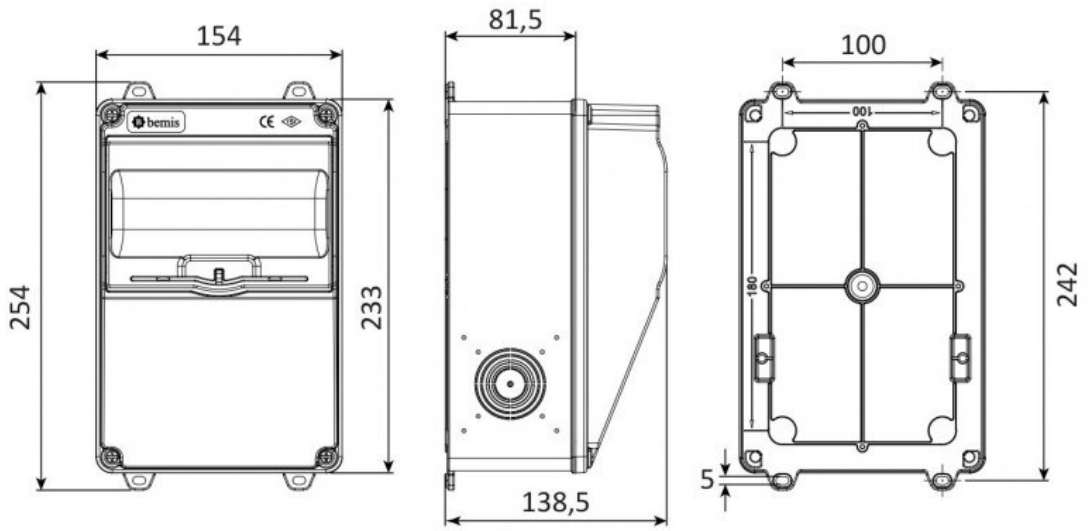


Technical values reflect the current product catalogue. Contact Bemis for installation documentation and confirmation of application suitability.