BH5-2000-0000

V7 combination unit

Product code: BH5-2000-0000

IP rating **IP44**	Material **ABS Halogen Free**
Socket option **without sockets**	Box quantity **1**



Specification	Value
Product code	BH5-2000-0000
Barcode	-
IP rating	IP44
Material	ABS Halogen Free
Socket option	without sockets
Weight (g)	-
Box quantity	1
Carton quantity	12

Technical drawing

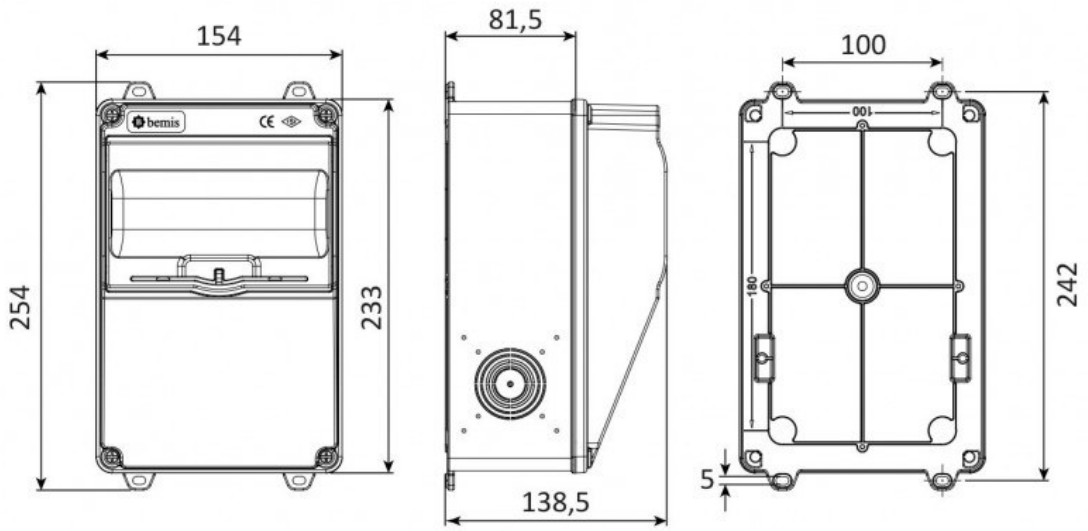

Technical values reflect the current product catalogue. Contact Bemis for installation documentation and confirmation of application suitability.