BD5-6114-2020

V7 combination unit

Product code: BD5-6114-2020

IP rating **IP66**	Material **ABS**
Socket option **with sockets**	Weight (g) **1070**



Specification	Value
Product code	BD5-6114-2020
Barcode	8698523905692
IP rating	IP66
Material	ABS
Socket option	with sockets
Weight (g)	1070
Box quantity	1
Carton quantity	12

Technical drawing

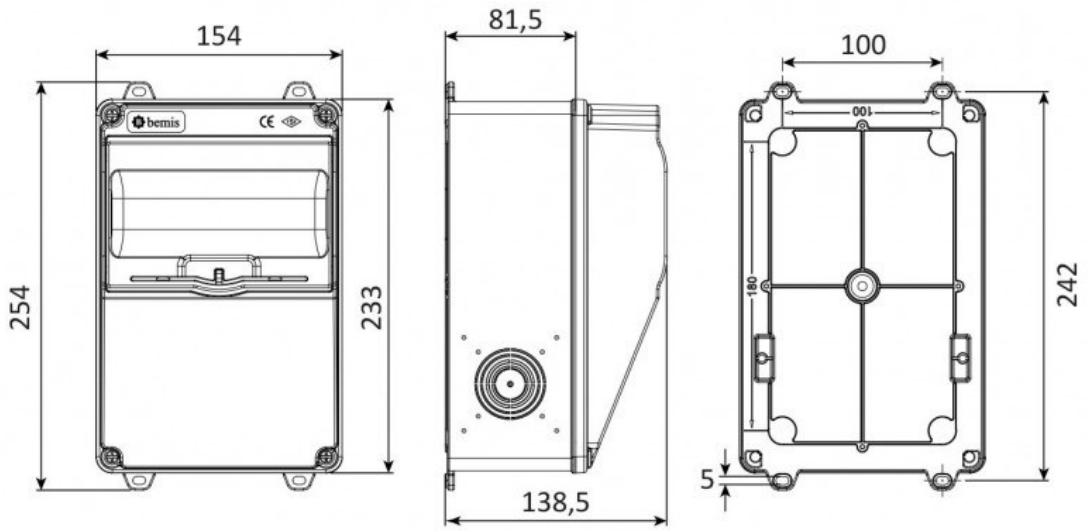

Technical values reflect the current product catalogue. Contact Bemis for installation documentation and confirmation of application suitability.