BD5-2118-2020

V7 combination unit

Product code: BD5-2118-2020

IP rating **IP44**	Material **ABS**
Socket option **with sockets**	Weight (g) **980**



Specification	Value
Product code	BD5-2118-2020
Barcode	8698523905364
IP rating	IP44
Material	ABS
Socket option	with sockets
Weight (g)	980
Box quantity	1
Carton quantity	12

Technical drawing

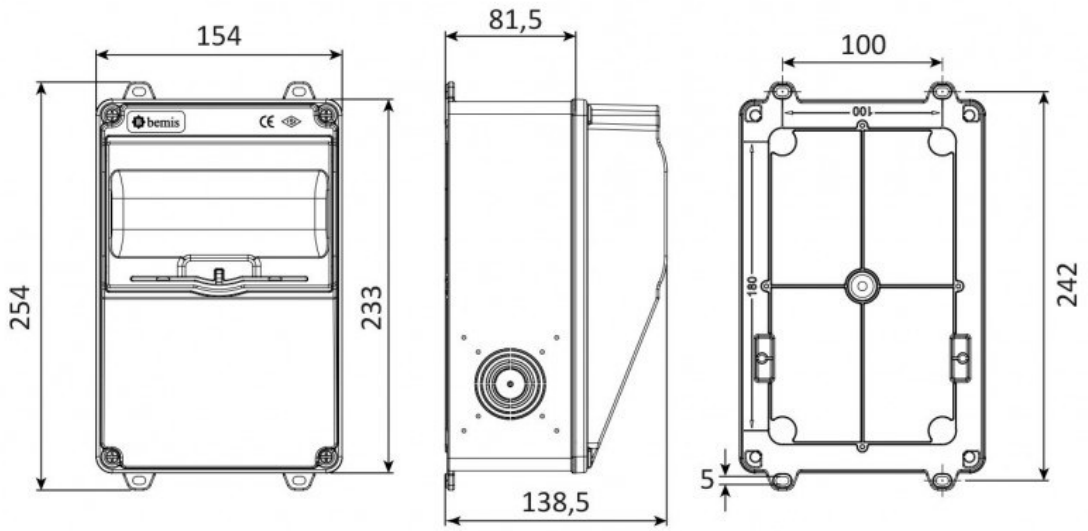

Technical values reflect the current product catalogue. Contact Bemis for installation documentation and confirmation of application suitability.