BH1-2101-0000

# V5 combination unit

Product code: BH1-2101-0000

| | |
|---|---|
| IP rating<br>**IP44** | Material<br>**ABS Halogen Free** |
| Socket option<br>**without sockets** | Box quantity<br>**1** |



| Specification | Value |
|---|---|
| Product code | BH1-2101-0000 |
| Barcode | - |
| IP rating | IP44 |
| Material | ABS Halogen Free |
| Socket option | without sockets |
| Weight (g) | - |
| Box quantity | 1 |
| Carton quantity | 12 |

## Technical drawing

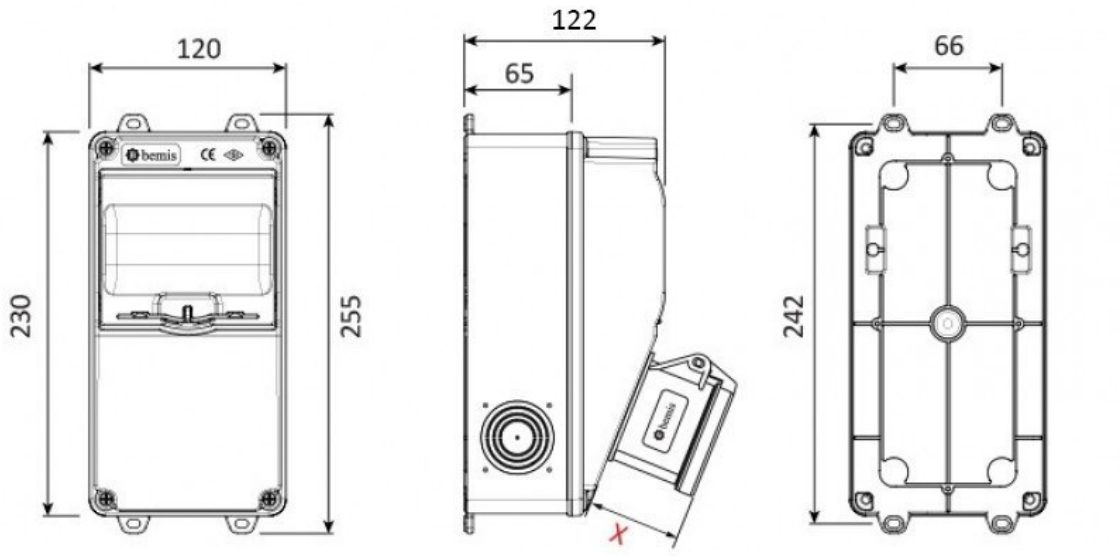


| (X) Ölçüleri / Dimensions (mm) | | | |
|---|---|---|---|
| 1/16A Pano Prizi | 18 | 3/4/5 32A Som Priz | 47 |
| 1/16A Mak. Prizi | 40 | 3/4/5 63A Mk.Prizi | 92 |
| 3/25A Som. Priz | 33 | 2/3 16A 24V Mk. Prizi | 42 |
| 3/4 16A Mak Prizi | 55 | 2/3 32A 24V Mk. Prizi | 42 |
| 5/16A Som. Priz | 47 | | |

Technical values reflect the current product catalogue. Contact Bemis for installation documentation and confirmation of application suitability.