BD1-6000-0000

V5 combination unit

Product code: BD1-6000-0000

IP rating **IP66**	Material **ABS**
Socket option **without sockets**	Weight (g) **522**



Specification	Value
Product code	BD1-6000-0000
Barcode	8698523942017
IP rating	IP66
Material	ABS
Socket option	without sockets
Weight (g)	522
Box quantity	1
Carton quantity	12

Technical drawing

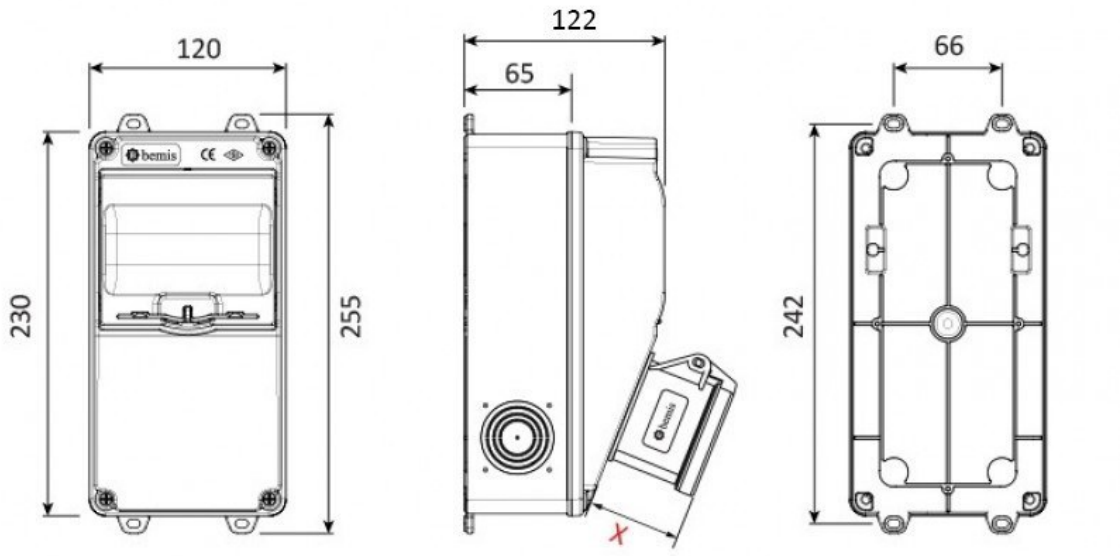

(X) Ölçüleri / Dimensions (mm)			
1/16A Pano Prizi	18	3/4/5 32A Som Priz	47
1/16A Mak. Prizi	40	3/4/5 63A Mk.Prizi	92
3/25A Som. Priz	33	2/3 16A 24V Mk. Prizi	42
3/4 16A Mak Prizi	55	2/3 32A 24V Mk. Prizi	42
5/16A Som. Priz	47		

Technical values reflect the current product catalogue. Contact Bemis for installation documentation and confirmation of application suitability.