BC3-6505-7114

# Appliance inlet (with pilot contact)

Product code: BC3-6505-7114

| IP rating | Current (source notation) |
|---|---|
| **IP67** | **125A** |

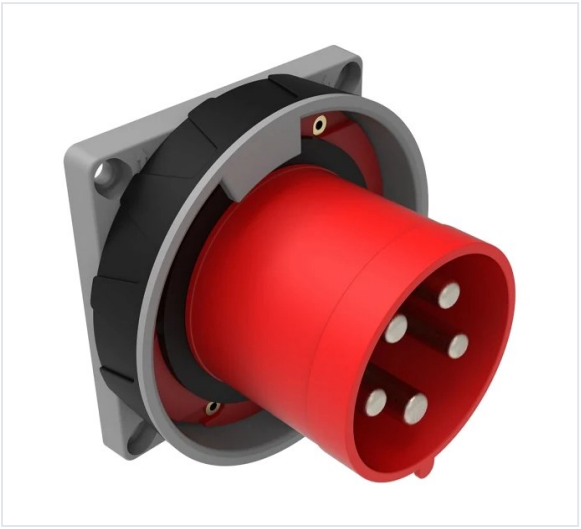

| Specification | Value |
|---|---|
| Product code | BC3-6505-7114 |
| Barcode | 8698523914700 |
| IP rating | IP67 |
| Current (source notation) | 125A |
| Voltage | 380V-450V |
| Frequency | 50Hz - 60Hz |
| Poles | 3P+E+N |
| Housing material | polyamide 6 |
| Conductor material | MS 58 |
| Weight (g) | 1053 |
| Box quantity | 1 |
| Carton quantity | 8 |

## Technical drawing

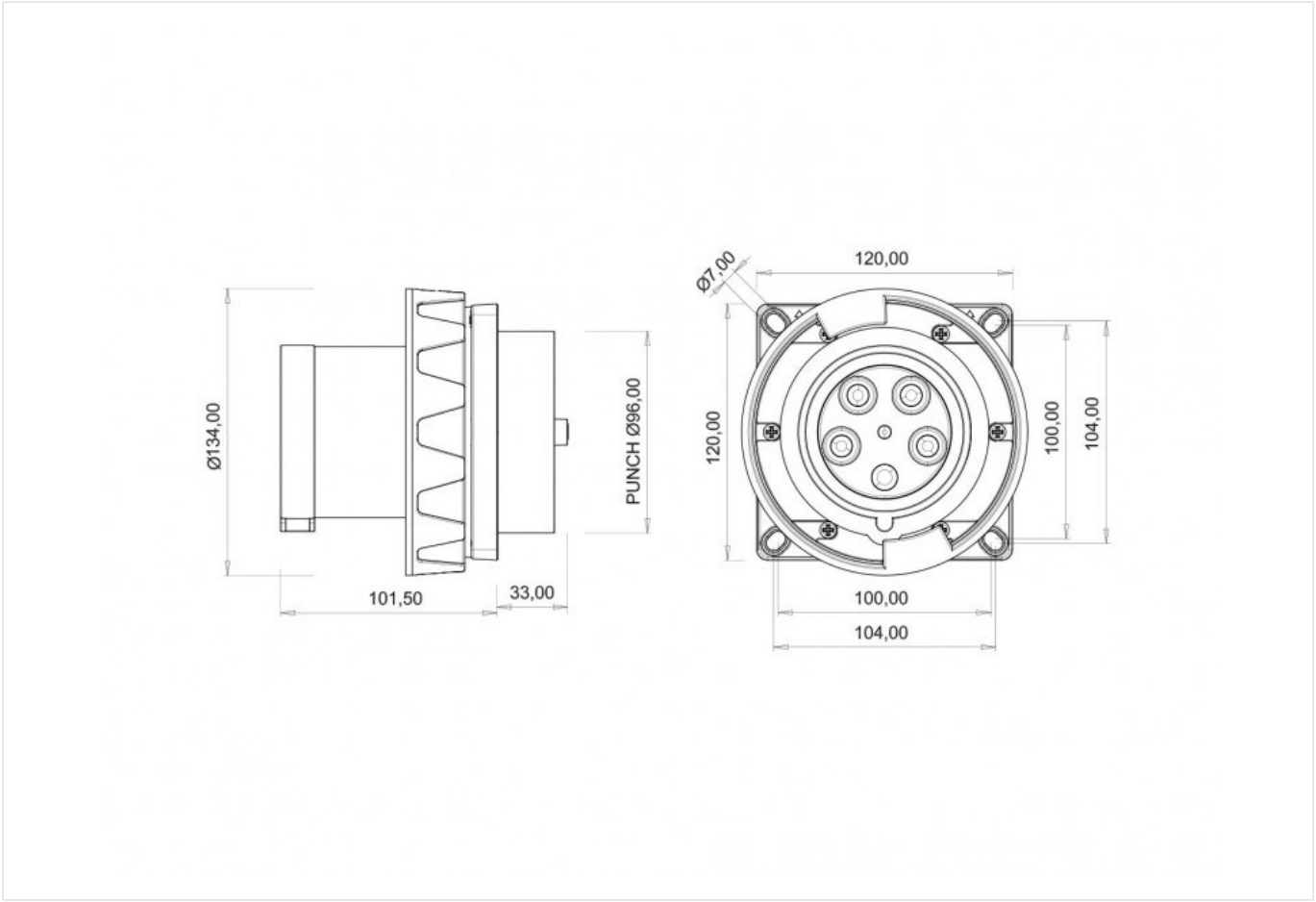


Technical values reflect the current product catalogue. Contact Bemis for installation documentation and confirmation of application suitability.