BC3-6504-7413

Panel socket (with pilot contact)

Product code: BC3-6504-7413

IP rating	Current (source notation)
IP67	**125A**



Specification	Value
Product code	BC3-6504-7413
Barcode	8698523914632
IP rating	IP67
Current (source notation)	125A
Voltage	380V-450V
Frequency	50Hz - 60Hz
Poles	3P+E
Housing material	polyamide 6
Conductor material	MS 58
Weight (g)	1095,2
Box quantity	1
Carton quantity	8

Technical drawing

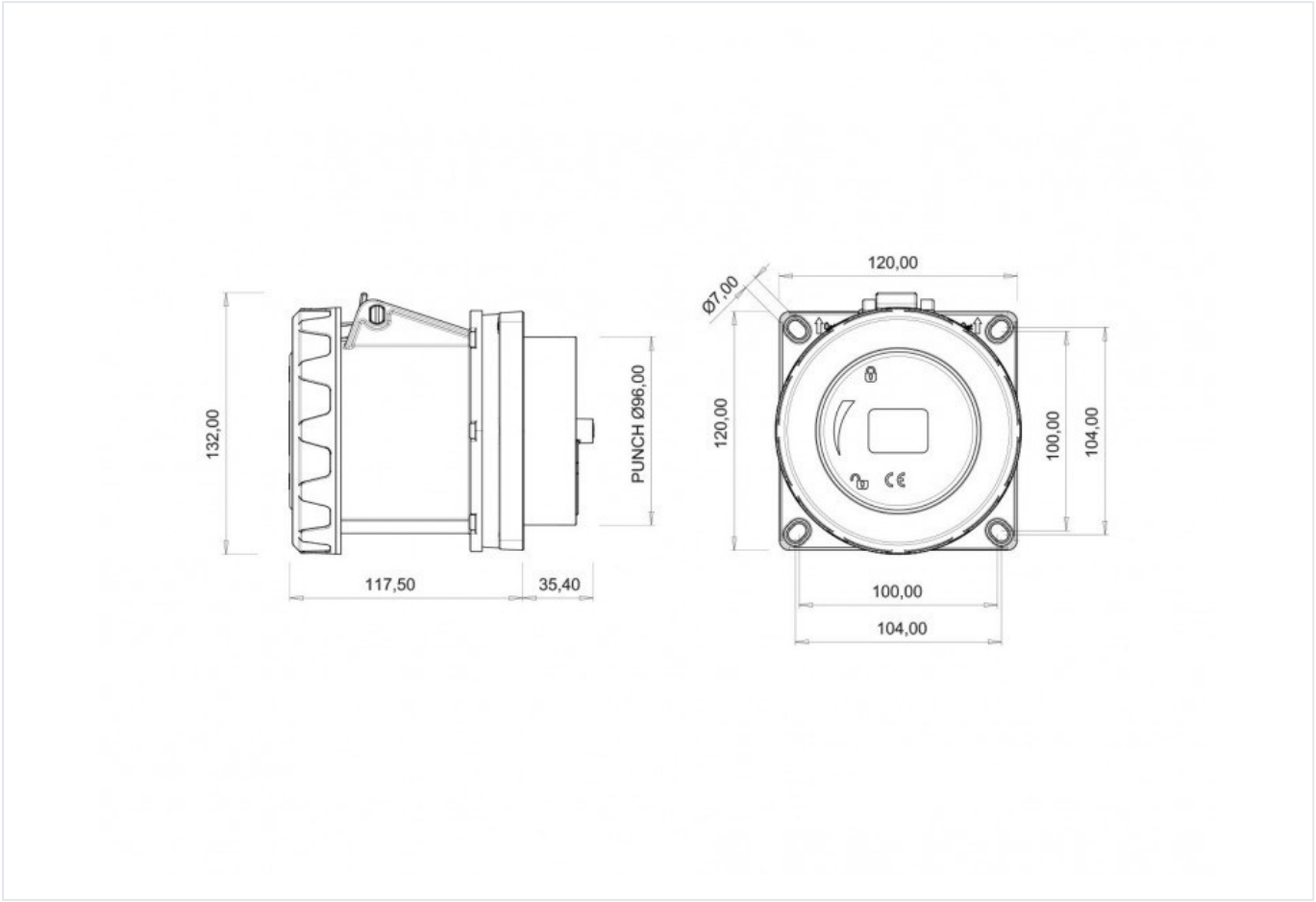

Technical values reflect the current product catalogue. Contact Bemis for installation documentation and confirmation of application suitability.