BC3-6403-7537

Wall socket (with pilot contact) — 90° — 1/16A. with panel socket

Product code: BC3-6403-7537



IP rating	Current (source notation)
IP67	**125A**

Specification	Value
Product code	BC3-6403-7537
Barcode	-
IP rating	IP67
Current (source notation)	125A
Voltage	220V-250V
Frequency	50Hz - 60Hz
Poles	2P+E
Housing material	polyamide 6
Conductor material	MS 58
Weight (g)	-
Box quantity	1
Carton quantity	4

Technical drawing

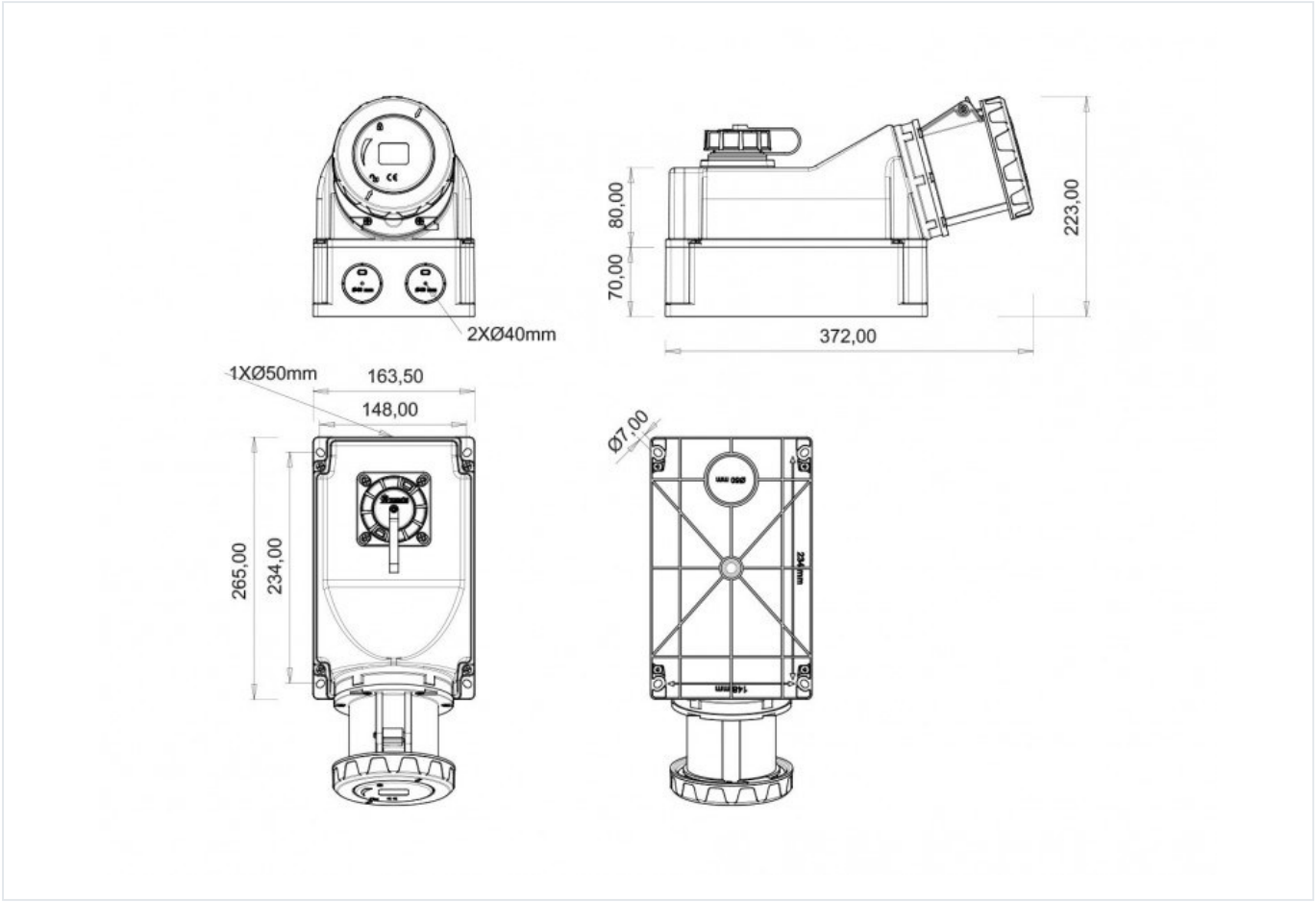

Technical values reflect the current product catalogue. Contact Bemis for installation documentation and confirmation of application suitability.