BC3-4505-2236

# Wall inlet (with pilot contact) — 90°

Product code: BC3-4505-2236

| IP rating | Current (source notation) |
|---|---|
| **IP44** | **63A** |



| Specification | Value |
|---|---|
| Product code | BC3-4505-2236 |
| Barcode | - |
| IP rating | IP44 |
| Current (source notation) | 63A |
| Voltage | 380V-450V |
| Frequency | 50Hz - 60Hz |
| Poles | 3P+E+N |
| Housing material | polyamide 6 |
| Conductor material | MS 58 |
| Weight (g) | - |
| Box quantity | 1 |
| Carton quantity | 7 |

## Technical drawing

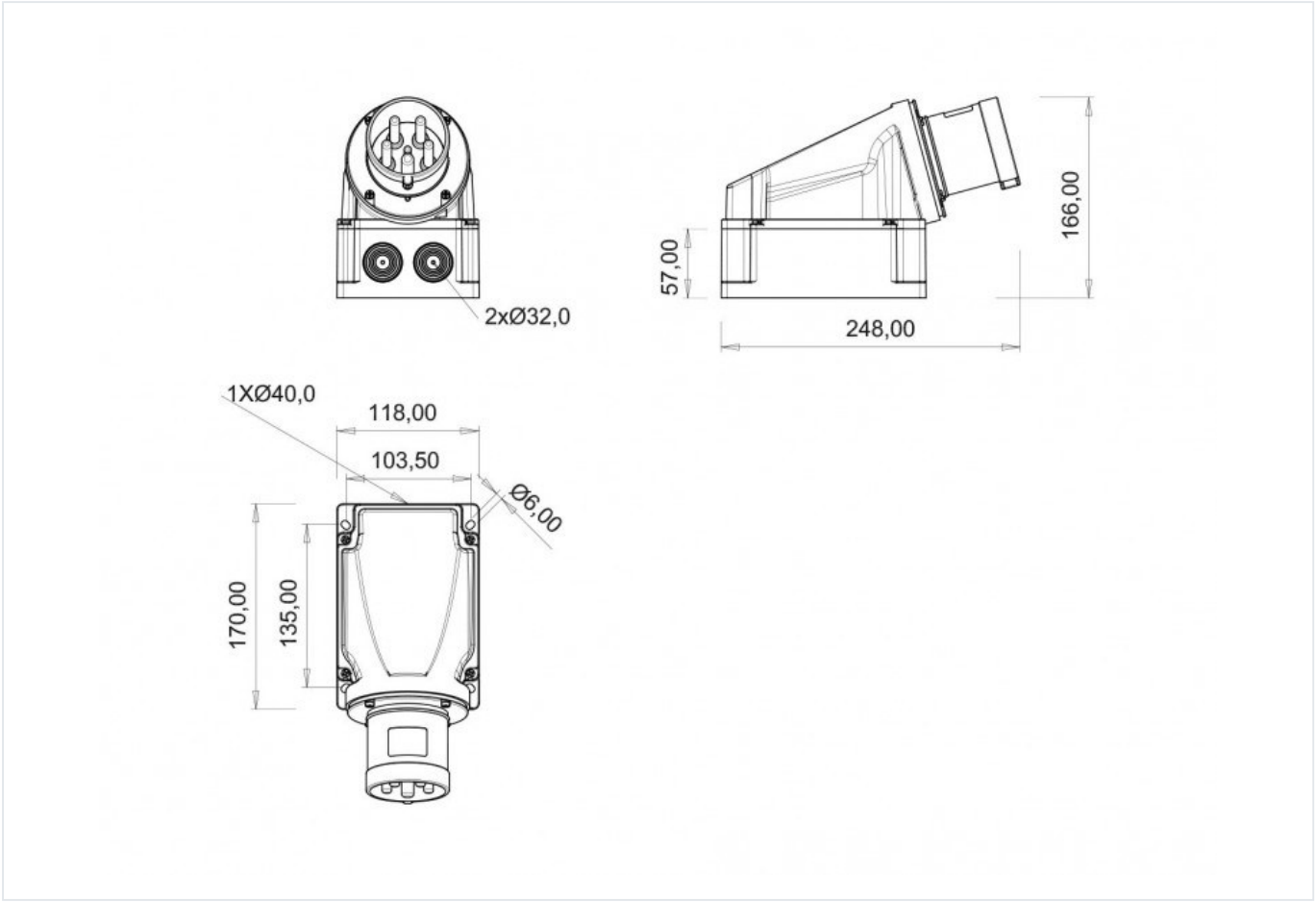


Technical values reflect the current product catalogue. Contact Bemis for installation documentation and confirmation of application suitability.