BC3-4403-2210

Wall inlet (with pilot contact)

Product code: BC3-4403-2210

IP rating	Current (source notation)
IP44	**63A**



Specification	Value
Product code	BC3-4403-2210
Barcode	-
IP rating	IP44
Current (source notation)	63A
Voltage	220V-250V
Frequency	50Hz - 60Hz
Poles	2P+E
Housing material	polyamide 6
Conductor material	MS 58
Weight (g)	-
Box quantity	1
Carton quantity	12

Technical drawing

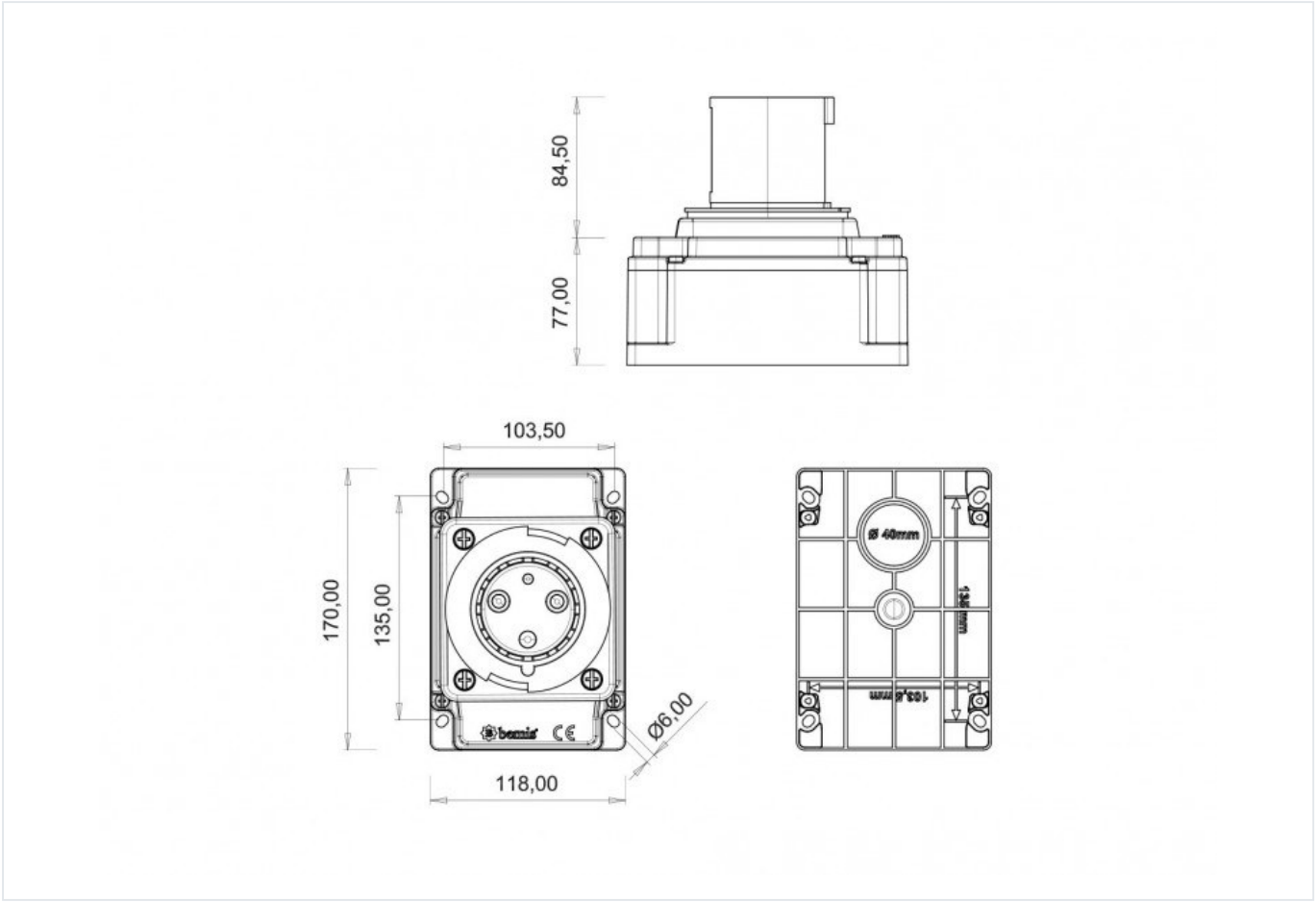

Technical values reflect the current product catalogue. Contact Bemis for installation documentation and confirmation of application suitability.