BC3-4303-7537

Wall socket — 90° — with panel socket

Product code: BC3-4303-7537

IP rating	Current (source notation)
IP67	**63A**



Specification	Value
Product code	BC3-4303-7537
Barcode	-
IP rating	IP67
Current (source notation)	63A
Voltage	110V-150V
Frequency	50Hz - 60Hz
Poles	2P+E
Housing material	polyamide 6
Conductor material	MS 58
Weight (g)	-
Box quantity	1
Carton quantity	7

Technical drawing

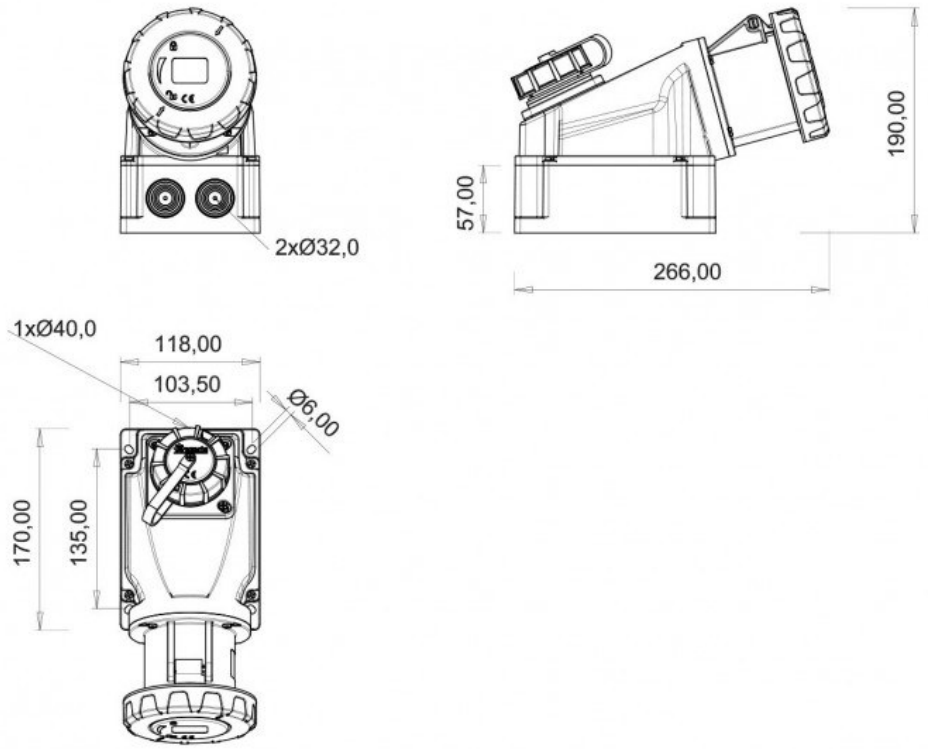

Technical values reflect the current product catalogue. Contact Bemis for installation documentation and confirmation of application suitability.