BCS-6505-7312

Cable connector

Product code: BCS-6505-7312

IP rating **IP67**	Current (source notation) **5/125A**
Voltage **380V-450V**	Poles **3P+E+N**



Specification	Value
Product code	BCS-6505-7312
Barcode	-
IP rating	IP67
Current (source notation)	5/125A
Voltage	380V-450V
Poles	3P+E+N
Housing material	polyamide 6
Conductor material	MS 58
Weight (g)	1502
Box quantity	1
Carton quantity	8

Technical drawing

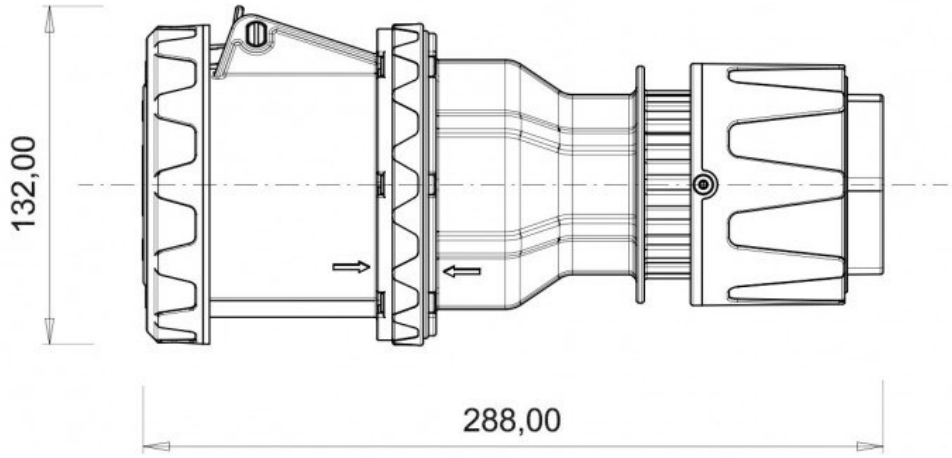

Technical values reflect the current product catalogue. Contact Bemis for installation documentation and confirmation of application suitability.