BCS-6504-7011

Industrial plug

Product code: BCS-6504-7011

IP rating **IP67**	Current (source notation) **4/125A**
Voltage **380V-450V**	Poles **3P+E**



Specification	Value
Product code	BCS-6504-7011
Barcode	-
IP rating	IP67
Current (source notation)	4/125A
Voltage	380V-450V
Frequency	50Hz - 60Hz
Poles	3P+E
Housing material	polyamide 6
Conductor material	MS 58
Weight (g)	1185
Box quantity	1
Carton quantity	8

Technical drawing

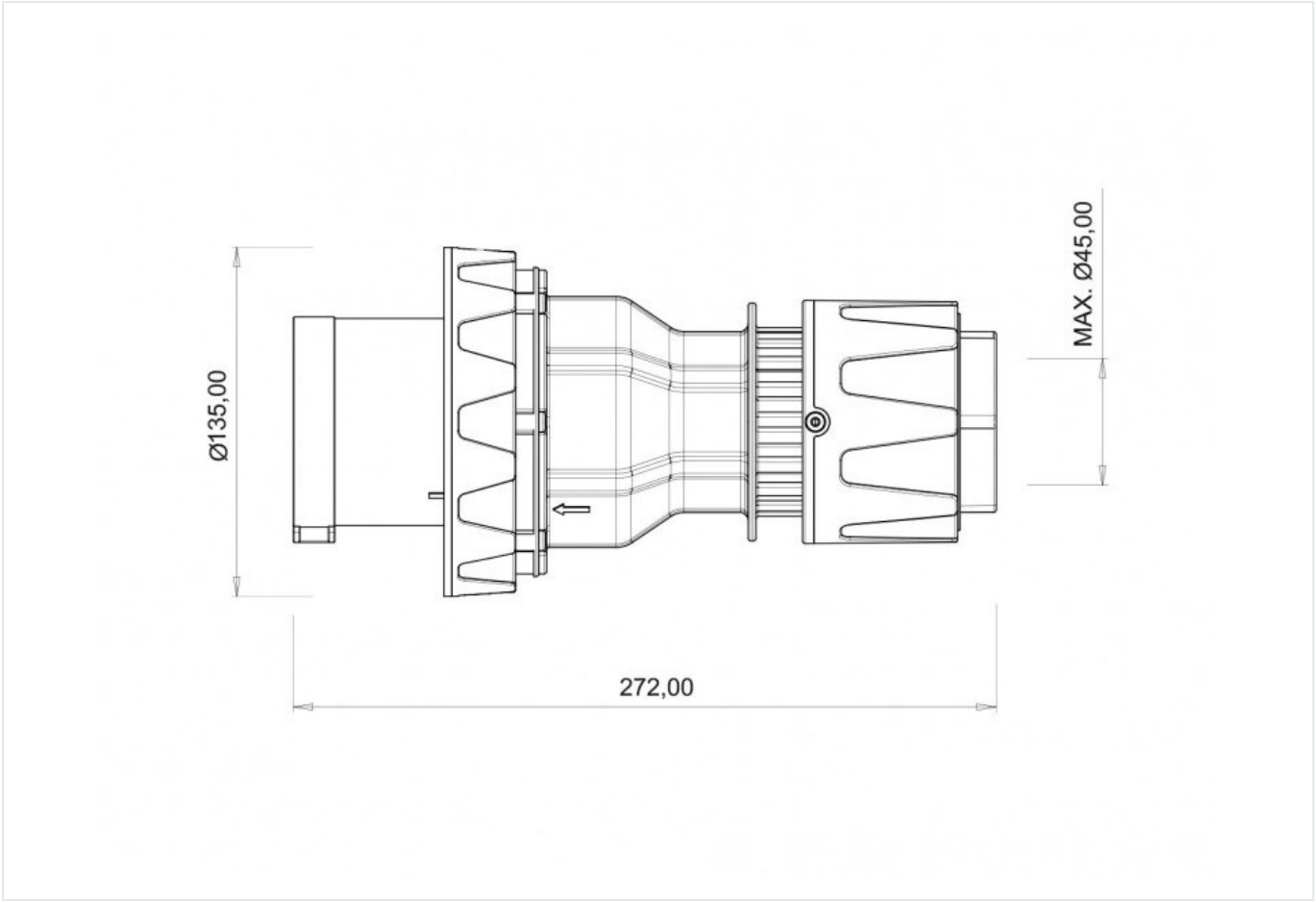

Technical values reflect the current product catalogue. Contact Bemis for installation documentation and confirmation of application suitability.