BCS-6403-7420

# 45° Panel socket

Product code: BCS-6403-7420

| | |
|---|---|
| IP rating<br>**IP67** | Current (source notation)<br>**3/125A** |
| Voltage<br>**220V-250V** | Poles<br>**2P+E** |



| Specification | Value |
|---|---|
| Product code | BCS-6403-7420 |
| Barcode | - |
| IP rating | IP67 |
| Current (source notation) | 3/125A |
| Voltage | 220V-250V |
| Frequency | 50Hz - 60Hz |
| Poles | 2P+E |
| Housing material | polyamide 6 |
| Conductor material | MS 58 |
| Weight (g) | 845 |
| Box quantity | 1 |
| Carton quantity | 8 |

## Technical drawing

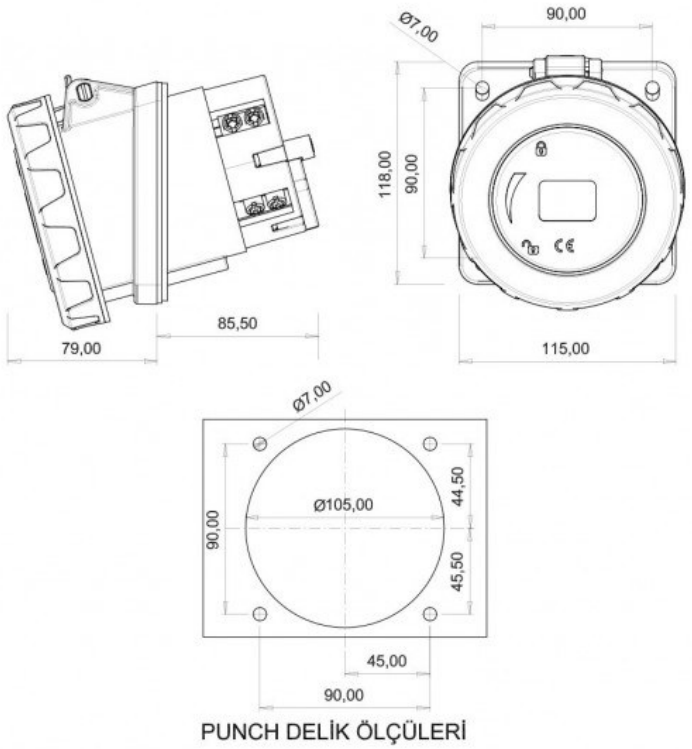


Technical values reflect the current product catalogue. Contact Bemis for installation documentation and confirmation of application suitability.