BCS-6403-7312

Cable connector

Product code: BCS-6403-7312

IP rating **IP67**	Current (source notation) **3/125A**
Voltage **220V-250V**	Poles **2P+E**



Specification	Value
Product code	BCS-6403-7312
Barcode	-
IP rating	IP67
Current (source notation)	3/125A
Voltage	220V-250V
Frequency	50Hz - 60Hz
Poles	2P+E
Housing material	polyamide 6
Conductor material	MS 58
Weight (g)	1234
Box quantity	1
Carton quantity	8

Technical drawing

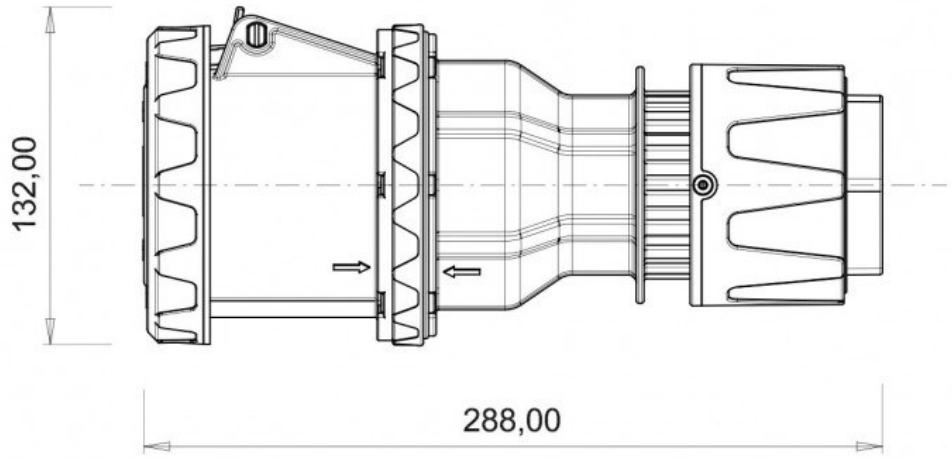

Technical values reflect the current product catalogue. Contact Bemis for installation documentation and confirmation of application suitability.