BCS-4504-7312

Cable connector

Product code: BCS-4504-7312

IP rating **IP67**	Current (source notation) **4/63A**
Voltage **380V-450V**	Poles **3P+E**



Specification	Value
Product code	BCS-4504-7312
Barcode	-
IP rating	IP67
Current (source notation)	4/63A
Voltage	380V-450V
Frequency	50Hz - 60Hz
Poles	3P+E
Housing material	polyamide 6
Conductor material	MS 58
Weight (g)	752,2
Box quantity	1
Carton quantity	12

Technical drawing

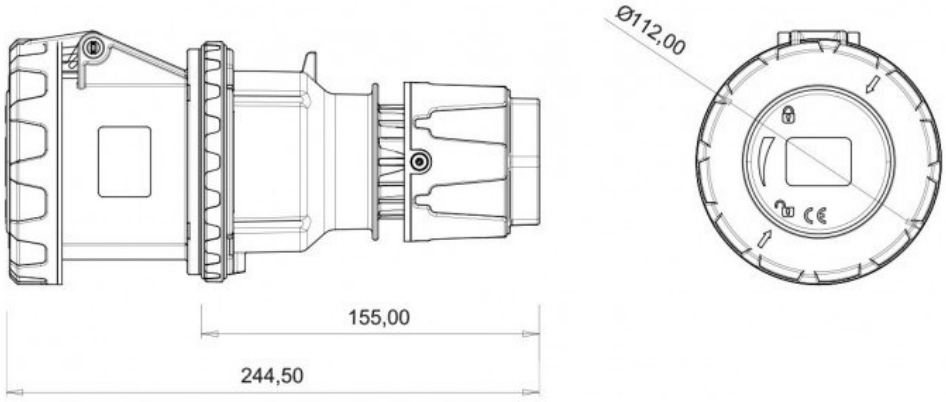

Technical values reflect the current product catalogue. Contact Bemis for installation documentation and confirmation of application suitability.