BCS-4504-2413

Panel socket

Product code: BCS-4504-2413

IP rating **IP44**	Current (source notation) **4/63A**
Voltage **380V-450V**	Poles **3P+E**



Specification	Value
Product code	BCS-4504-2413
Barcode	-
IP rating	IP44
Current (source notation)	4/63A
Voltage	380V-450V
Frequency	50Hz - 60Hz
Poles	3P+E
Housing material	polyamide 6
Conductor material	MS 58
Weight (g)	520,7
Box quantity	1
Carton quantity	24

Technical drawing

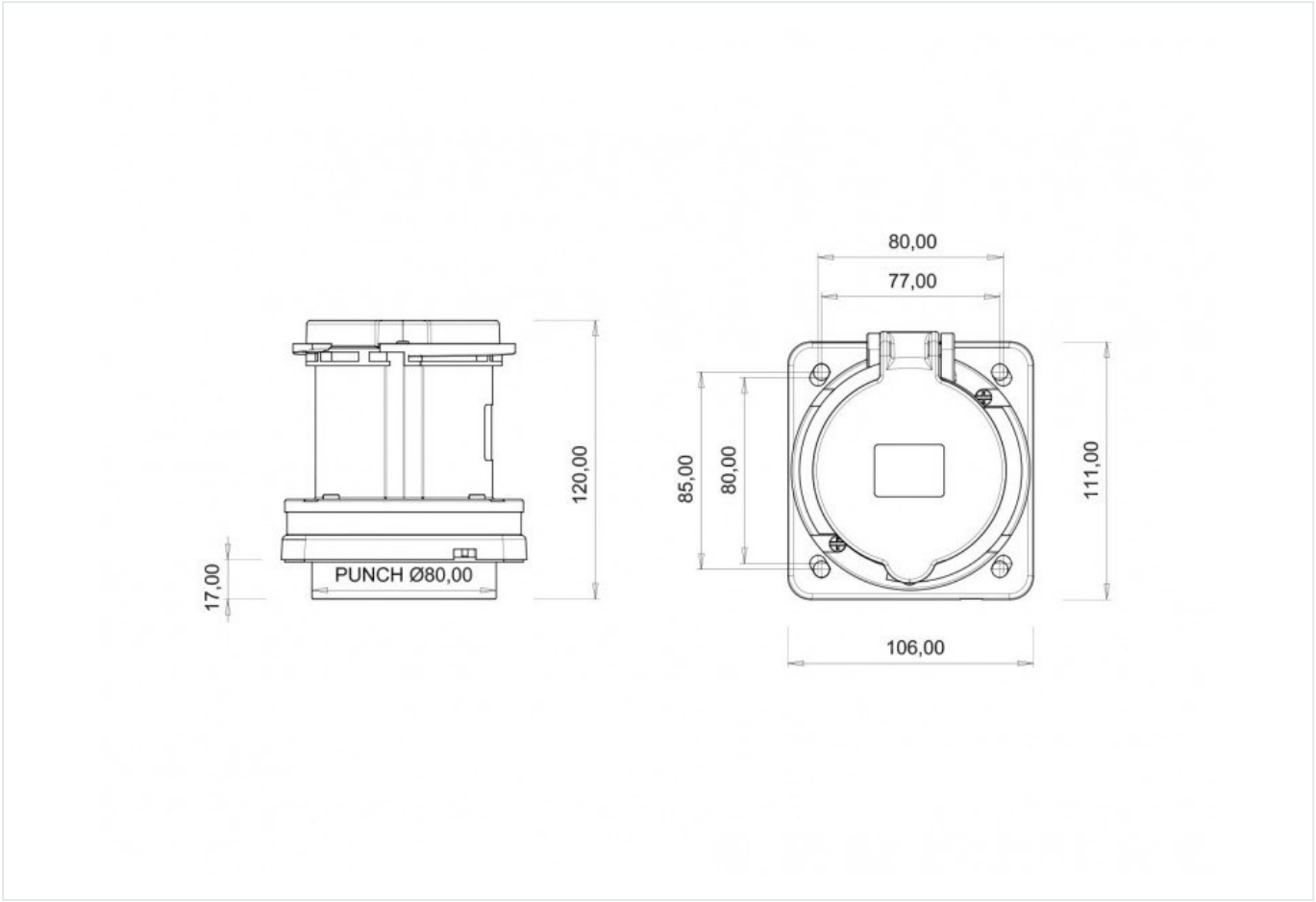

Technical values reflect the current product catalogue. Contact Bemis for installation documentation and confirmation of application suitability.