BCS-4403-2312

# Cable connector

Product code: BCS-4403-2312

| | |
|---|---|
| IP rating<br>**IP44** | Current (source notation)<br>**3/63A** |
| Voltage<br>**220V-250V** | Poles<br>**2P+E** |



| Specification | Value |
|---|---|
| Product code | BCS-4403-2312 |
| Barcode | - |
| IP rating | IP44 |
| Current (source notation) | 3/63A |
| Voltage | 220V-250V |
| Frequency | 50Hz - 60Hz |
| Poles | 2P+E |
| Housing material | polyamide 6 |
| Conductor material | MS 58 |
| Weight (g) | 630,4 |
| Box quantity | 1 |
| Carton quantity | 12 |

## Technical drawing

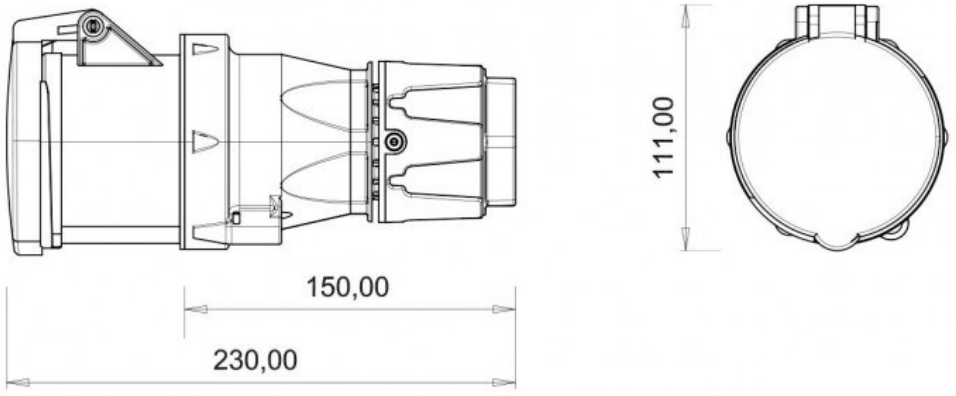


Technical values reflect the current product catalogue. Contact Bemis for installation documentation and confirmation of application suitability.