BCS-3505-2420

45° Panel socket

Product code: BCS-3505-2420

IP rating **IP44**	Current (source notation) **5/32A**
Voltage **380V-450V**	Poles **3P+E+N**



Specification	Value
Product code	BCS-3505-2420
Barcode	-
IP rating	IP44
Current (source notation)	5/32A
Voltage	380V-450V
Frequency	50Hz - 60Hz
Poles	3P+E+N
Housing material	polyamide 6
Conductor material	MS 58
Weight (g)	235,3
Box quantity	6
Carton quantity	108

Technical drawing

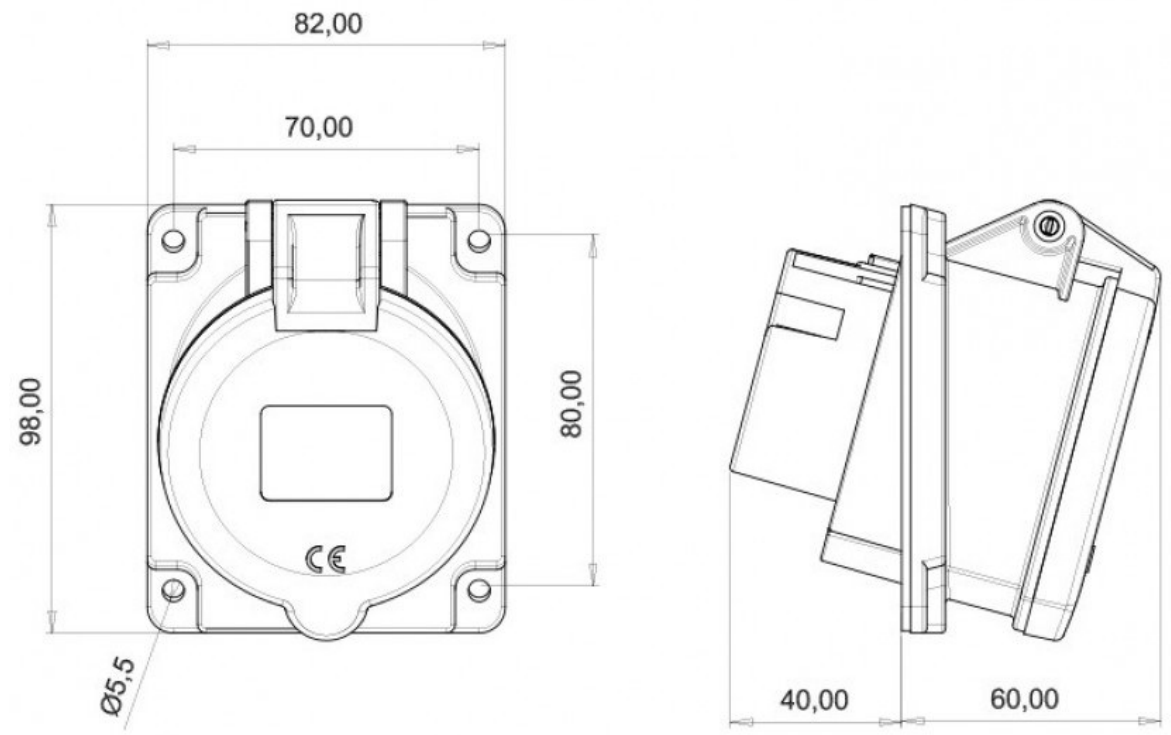

Technical values reflect the current product catalogue. Contact Bemis for installation documentation and confirmation of application suitability.