BCS-3403-2420

# 45° Panel socket

Product code: BCS-3403-2420

| | |
|---|---|
| IP rating<br>**IP44** | Current (source notation)<br>**3/32A** |
| Voltage<br>**220V-250V** | Poles<br>**2P+E** |



| Specification | Value |
|---|---|
| Product code | BCS-3403-2420 |
| Barcode | - |
| IP rating | IP44 |
| Current (source notation) | 3/32A |
| Voltage | 220V-250V |
| Frequency | 50Hz - 60Hz |
| Poles | 2P+E |
| Housing material | polyamide 6 |
| Conductor material | MS 58 |
| Weight (g) | 234,6 |
| Box quantity | 6 |
| Carton quantity | 108 |

## Technical drawing

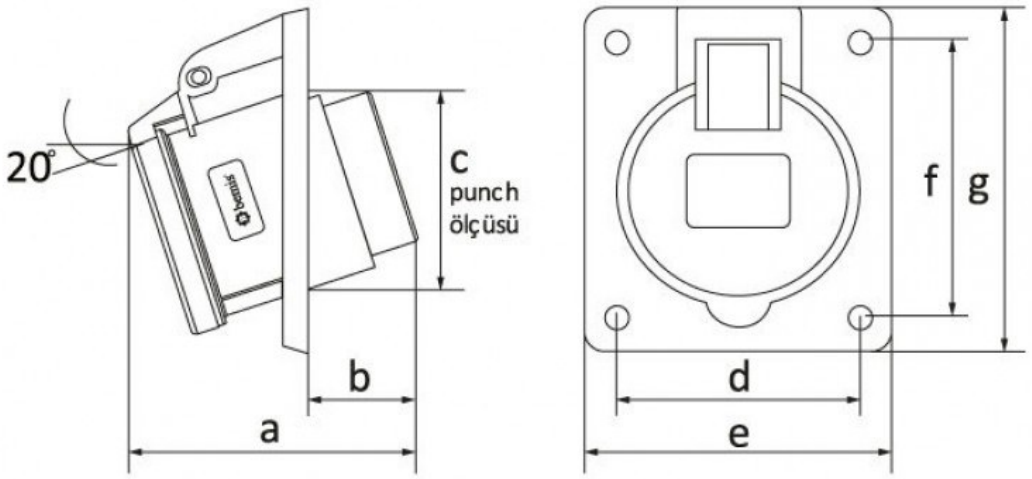


| Ölçüler / Dimensions (mm) | | | |
|---|---|---|---|
| a | 102 | e | 91 |
| b | 42 | f | 82 |
| c | 80 | g | 100 |
| d | 77 | h | |

Technical values reflect the current product catalogue. Contact Bemis for installation documentation and confirmation of application suitability.