BCS-1504-7420

45° Panel socket

Product code: BCS-1504-7420

IP rating **IP67**	Current (source notation) **4/16A**
Voltage **380V-450V**	Poles **3P+E**



Specification	Value
Product code	BCS-1504-7420
Barcode	-
IP rating	IP67
Current (source notation)	4/16A
Voltage	380V-450V
Frequency	50Hz - 60Hz
Poles	3P+E
Housing material	polyamide 6
Conductor material	MS 58
Weight (g)	175,1
Box quantity	6
Carton quantity	108

Technical drawing

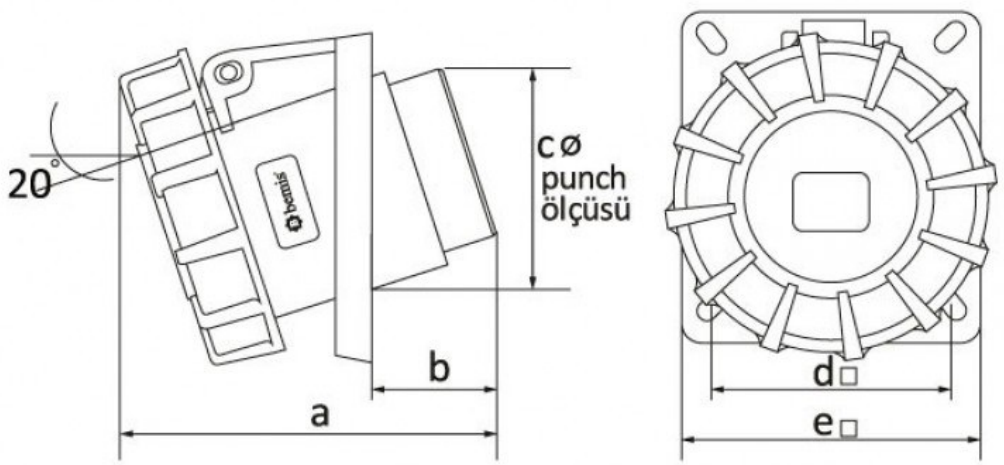

Ölçüler / Dimensions (mm)			
a	86	e□	85x85
b	30	f	
cø	70	g	
d□	70x70	h	

Technical values reflect the current product catalogue. Contact Bemis for installation documentation and confirmation of application suitability.