BCS-1504-2312

Cable connector

Product code: BCS-1504-2312

IP rating **IP44**	Current (source notation) **4/16A**
Voltage **380V-450V**	Poles **3P+E**



Specification	Value
Product code	BCS-1504-2312
Barcode	-
IP rating	IP44
Current (source notation)	4/16A
Voltage	380V-450V
Frequency	50Hz - 60Hz
Poles	3P+E
Housing material	polyamide 6
Conductor material	MS 58
Weight (g)	187,4
Box quantity	8
Carton quantity	144

Technical drawing

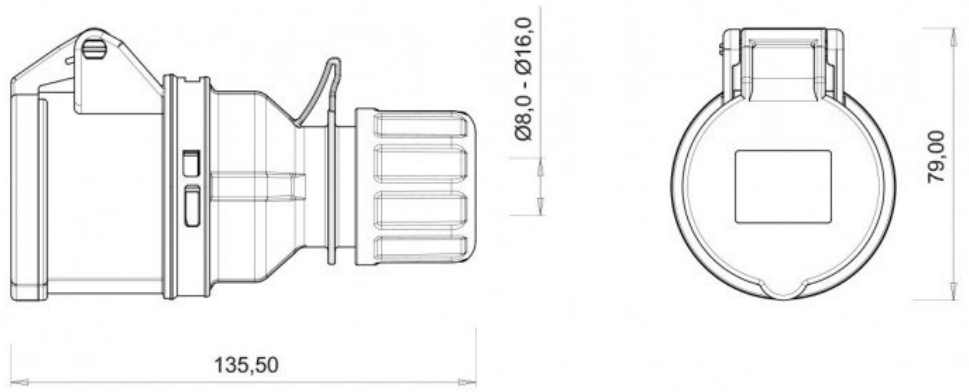

Technical values reflect the current product catalogue. Contact Bemis for installation documentation and confirmation of application suitability.