BC1-8505-7537

Wall socket — 90° — with panel socket

Product code: BC1-8505-7537

IP rating	Current (source notation)
IP67	**5/160A**



Specification	Value
Product code	BC1-8505-7537
Barcode	-
IP rating	IP67
Current (source notation)	5/160A
Voltage	380V-450V
Frequency	50Hz - 60Hz
Poles	3P+E+N
Housing material	polyamide 6
Conductor material	MS 58
Weight (g)	-
Box quantity	1
Carton quantity	4

Technical drawing

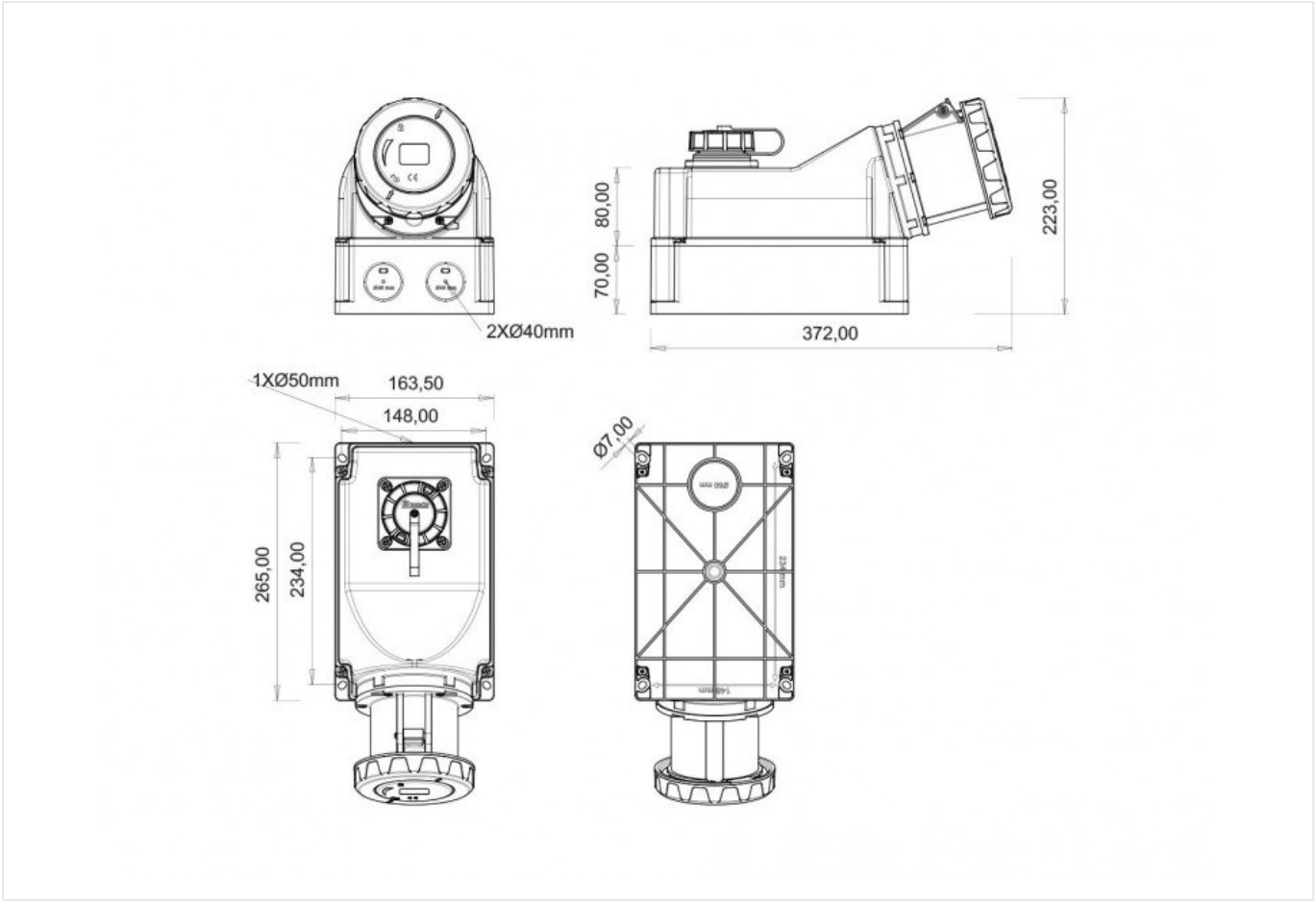

Technical values reflect the current product catalogue. Contact Bemis for installation documentation and confirmation of application suitability.