BC1-3103-7236

90° Wall inlet

Product code: BC1-3103-7236

IP rating **IP67**	Current (source notation) **32A**
Voltage **24V**	Poles **3P**



Specification	Value
Product code	BC1-3103-7236
Barcode	8698523911235
IP rating	IP67
Current (source notation)	32A
Voltage	24V
Frequency	50Hz - 60Hz
Poles	3P
Housing material	polyamide 6
Conductor material	MS 58
Weight (g)	238
Box quantity	3
Carton quantity	54

Technical drawing

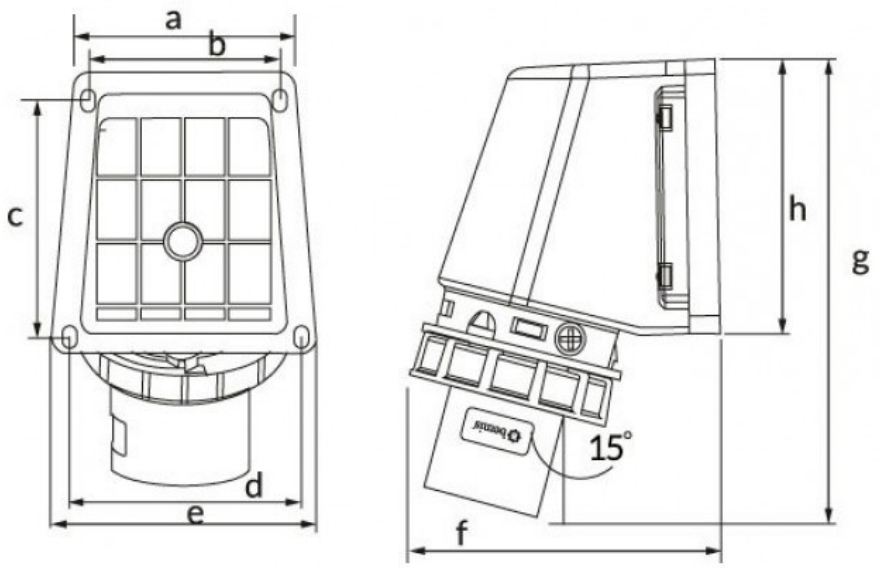

Ölçüler / Dimensions (mm)			
a	78	e	87
b	64	f	102
c	76	g	150
d	78	h	87

Technical values reflect the current product catalogue. Contact Bemis for installation documentation and confirmation of application suitability.