BC1-3103-7312

Cable connector

Product code: BC1-3103-7312

IP rating **IP67**	Current (source notation) **32A**
Voltage **24V**	Poles **3P**

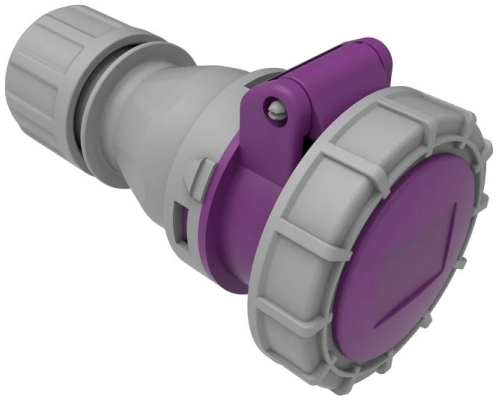

Specification	Value
Product code	BC1-3103-7312
Barcode	8698523911242
IP rating	IP67
Current (source notation)	32A
Voltage	24V
Frequency	50Hz - 60Hz
Poles	3P
Housing material	polyamide 6
Conductor material	MS 58
Weight (g)	197
Box quantity	8
Carton quantity	144

Technical drawing

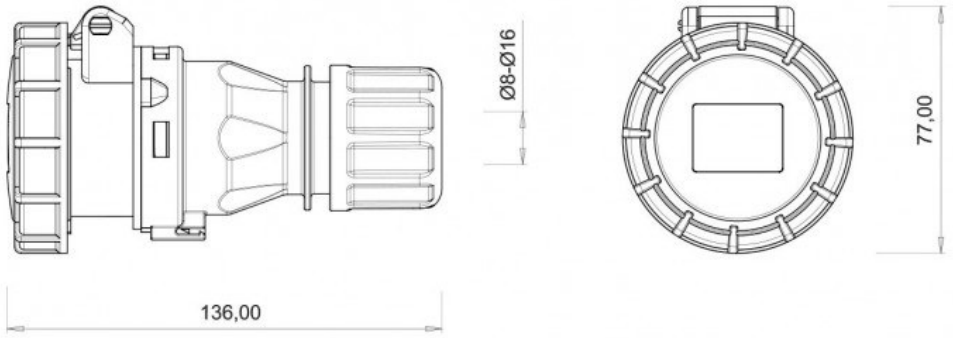

Technical values reflect the current product catalogue. Contact Bemis for installation documentation and confirmation of application suitability.