BC1-3103-2413

Panel socket

Product code: BC1-3103-2413

IP rating	Current (source notation)
IP44	**32A**
Voltage	Poles
24V	**3P**



Specification	Value
Product code	BC1-3103-2413
Barcode	8698523910832
IP rating	IP44
Current (source notation)	32A
Voltage	24V
Frequency	50Hz - 60Hz
Poles	3P
Housing material	polyamide 6
Conductor material	MS 58
Weight (g)	151
Box quantity	15
Carton quantity	180

Technical drawing

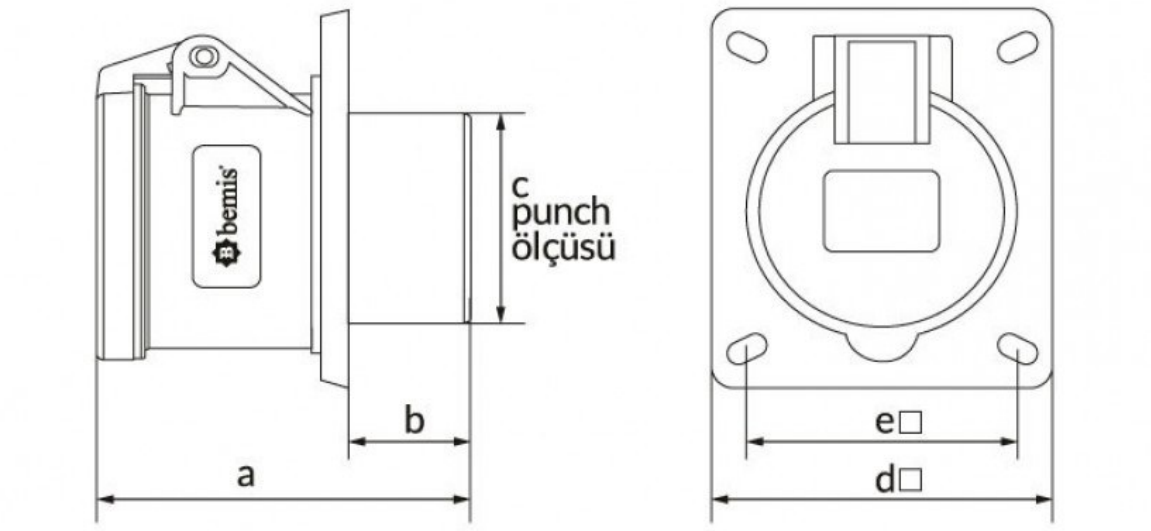

Ölçüler / Dimensions (mm)			
a	68,5	e□	58
b	22	f	
c	40	g	
d□	75	h	

Technical values reflect the current product catalogue. Contact Bemis for installation documentation and confirmation of application suitability.