BC1-3103-2414

Panel socket (one-piece)

Product code: BC1-3103-2414

IP rating	Current (source notation)
IP44	**32A**
Voltage	Poles
24V	**3P**

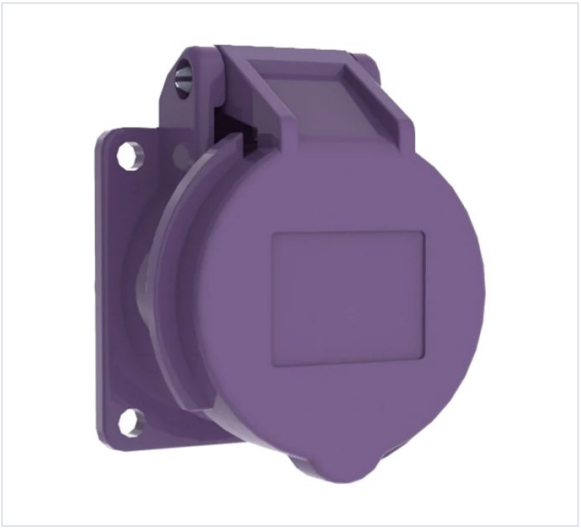

Specification	Value
Product code	BC1-3103-2414
Barcode	8698523910849
IP rating	IP44
Current (source notation)	32A
Voltage	24V
Frequency	50Hz - 60Hz
Poles	3P
Housing material	polyamide 6
Conductor material	MS 58
Weight (g)	128
Box quantity	20
Carton quantity	240

Technical drawing

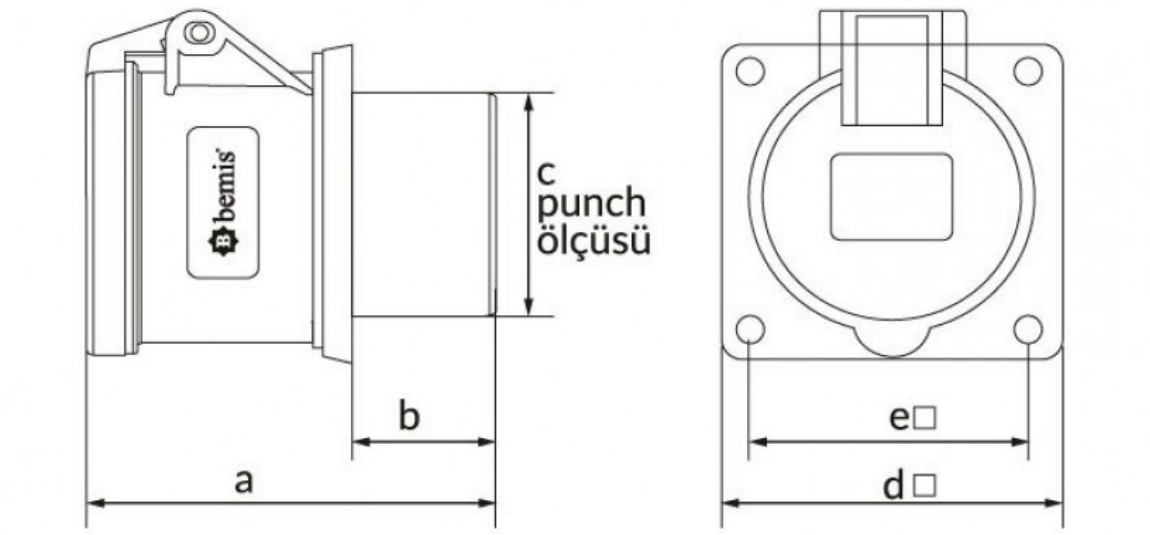

Ölçüler / Dimensions (mm)			
a	68,5	e□	45
b	30	f	
c	50	g	
d□	55	h	

Technical values reflect the current product catalogue. Contact Bemis for installation documentation and confirmation of application suitability.