BC1-3102-7535

90° Wall socket

Product code: BC1-3102-7535

IP rating **IP67**	Current (source notation) **32A**
Voltage **24V**	Poles **2P**



Specification	Value
Product code	BC1-3102-7535
Barcode	8698523910771
IP rating	IP67
Current (source notation)	32A
Voltage	24V
Frequency	50Hz - 60Hz
Poles	2P
Housing material	polyamide 6
Conductor material	MS 58
Weight (g)	260
Box quantity	3
Carton quantity	54

Technical drawing

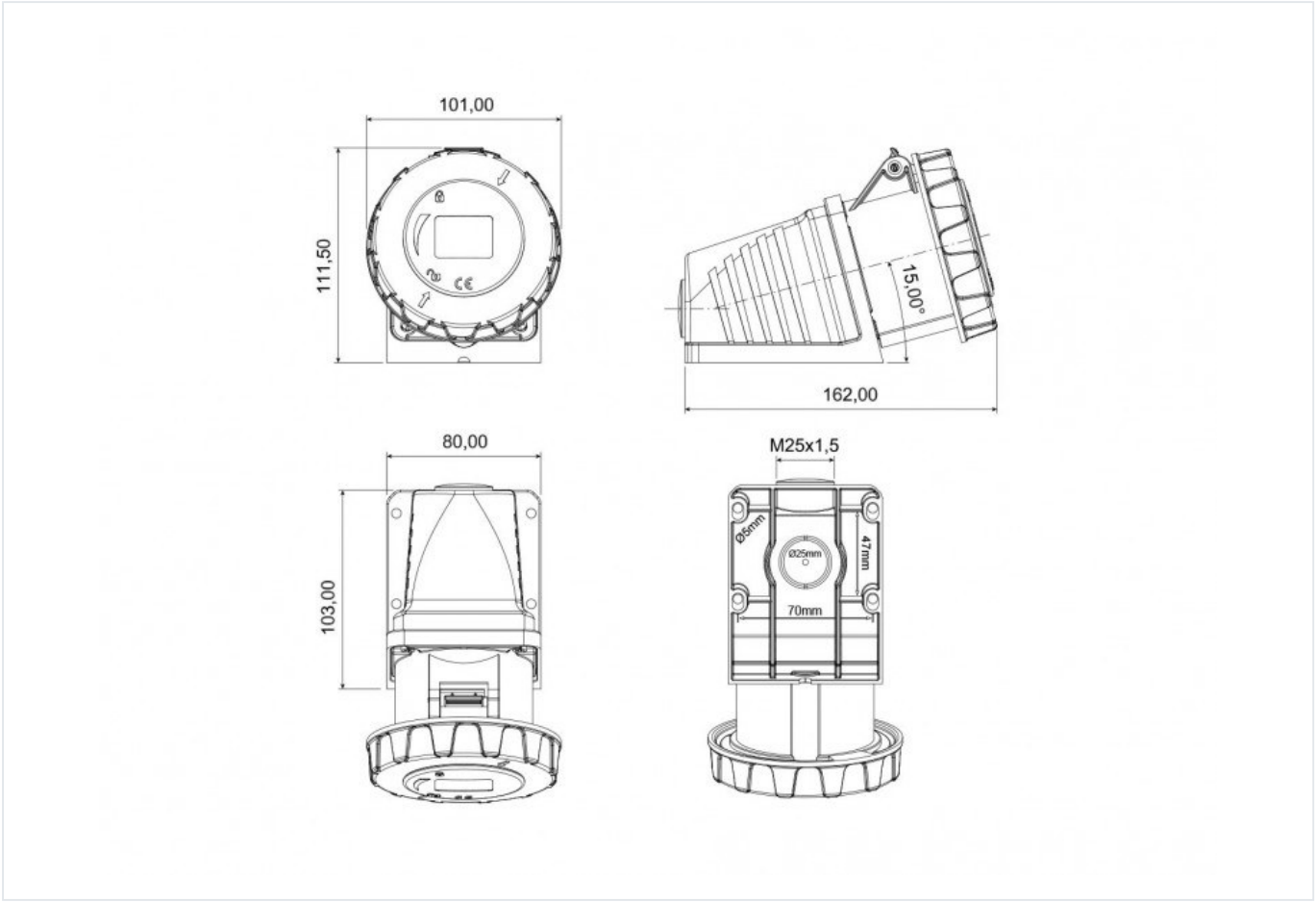

Technical values reflect the current product catalogue. Contact Bemis for installation documentation and confirmation of application suitability.