BC1-3102-7414

Panel socket (one-piece)

Product code: BC1-3102-7414

IP rating **IP67**	Current (source notation) **32A**
Voltage **24V**	Poles **2P**

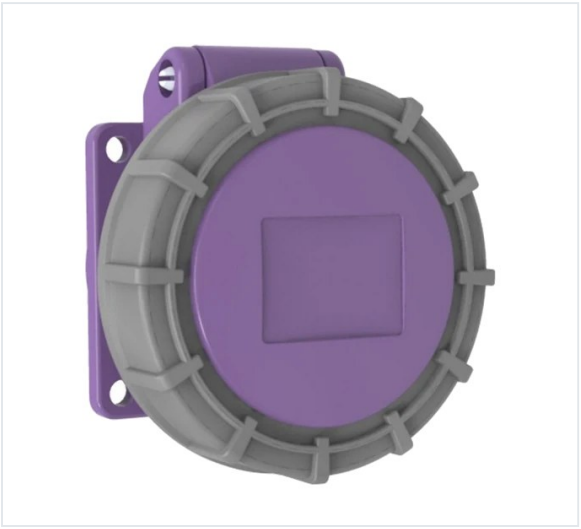

Specification	Value
Product code	BC1-3102-7414
Barcode	8698523910757
IP rating	IP67
Current (source notation)	32A
Voltage	24V
Frequency	50Hz - 60Hz
Poles	2P
Housing material	polyamide 6
Conductor material	MS 58
Weight (g)	127
Box quantity	8
Carton quantity	144

Technical drawing

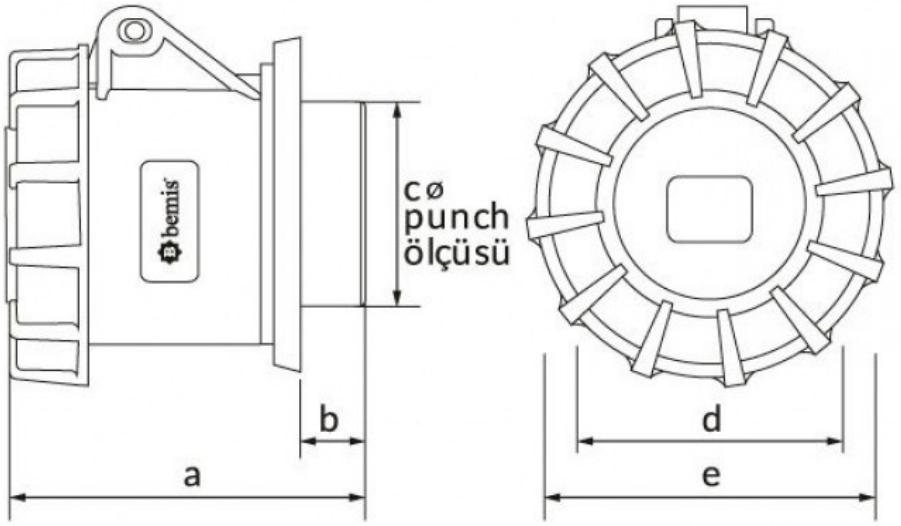

Ölçüler / Dimensions (mm)			
a	77	e	55
b	30	f	
cø	50	g	
d	45	h	

Technical values reflect the current product catalogue. Contact Bemis for installation documentation and confirmation of application suitability.