BC1-3102-2510

Wall socket

Product code: BC1-3102-2510

IP rating **IP44**	Current (source notation) **32A**
Voltage **24V**	Poles **2P**

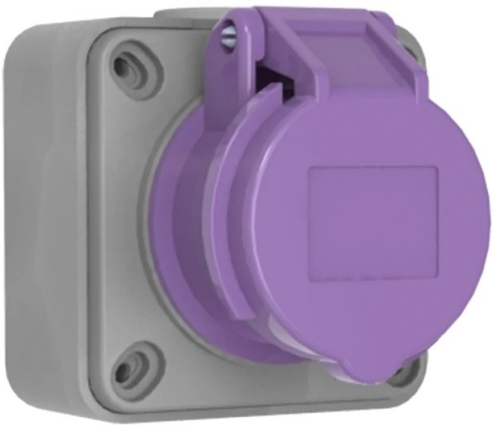

Specification	Value
Product code	BC1-3102-2510
Barcode	8698523910672
IP rating	IP44
Current (source notation)	32A
Voltage	24V
Frequency	50Hz - 60Hz
Poles	2P
Housing material	polyamide 6
Conductor material	MS 58
Weight (g)	187
Box quantity	6
Carton quantity	108

Technical drawing

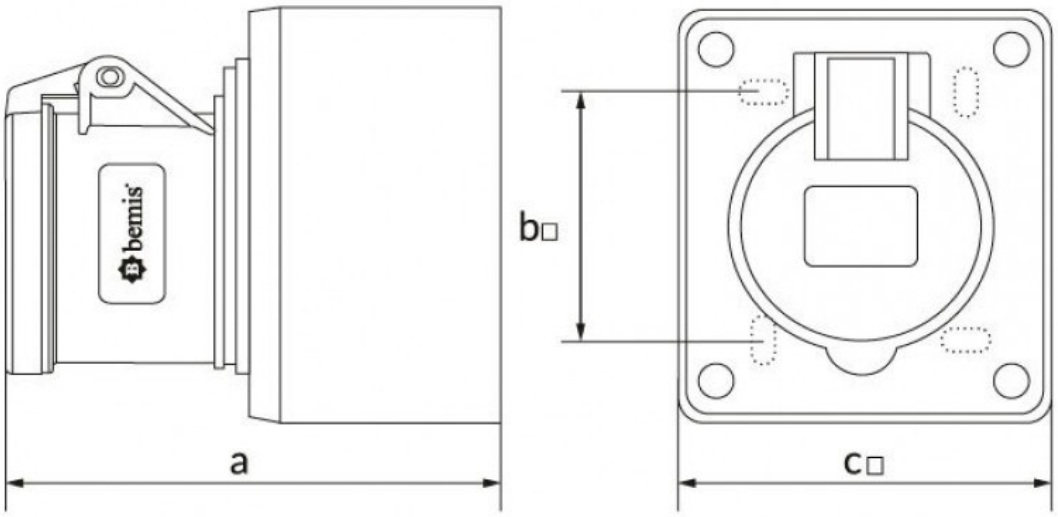

Ölçüler / Dimensions (mm)			
a	82	e	
b□	60	f	
c□	80	g	
d		h	

Technical values reflect the current product catalogue. Contact Bemis for installation documentation and confirmation of application suitability.