BM3-4303-0000

Metal cable reel

Product code: BM3-4303-0000

IP rating **IP44**	Socket option **with sockets**
Cable option **without cable**	Cable type **3x2,5mm**



Specification	Value
Product code	BM3-4303-0000
Barcode	8698523902592
IP rating	IP44
Housing material	0,8mm cold-rolled steel sheet
Socket option	with sockets
Cable option	without cable
Cable capacity	50m. cable capacity
Cable type	3x2,5mm
Weight (g)	2672
Box quantity	1
Carton quantity	1

Technical drawing

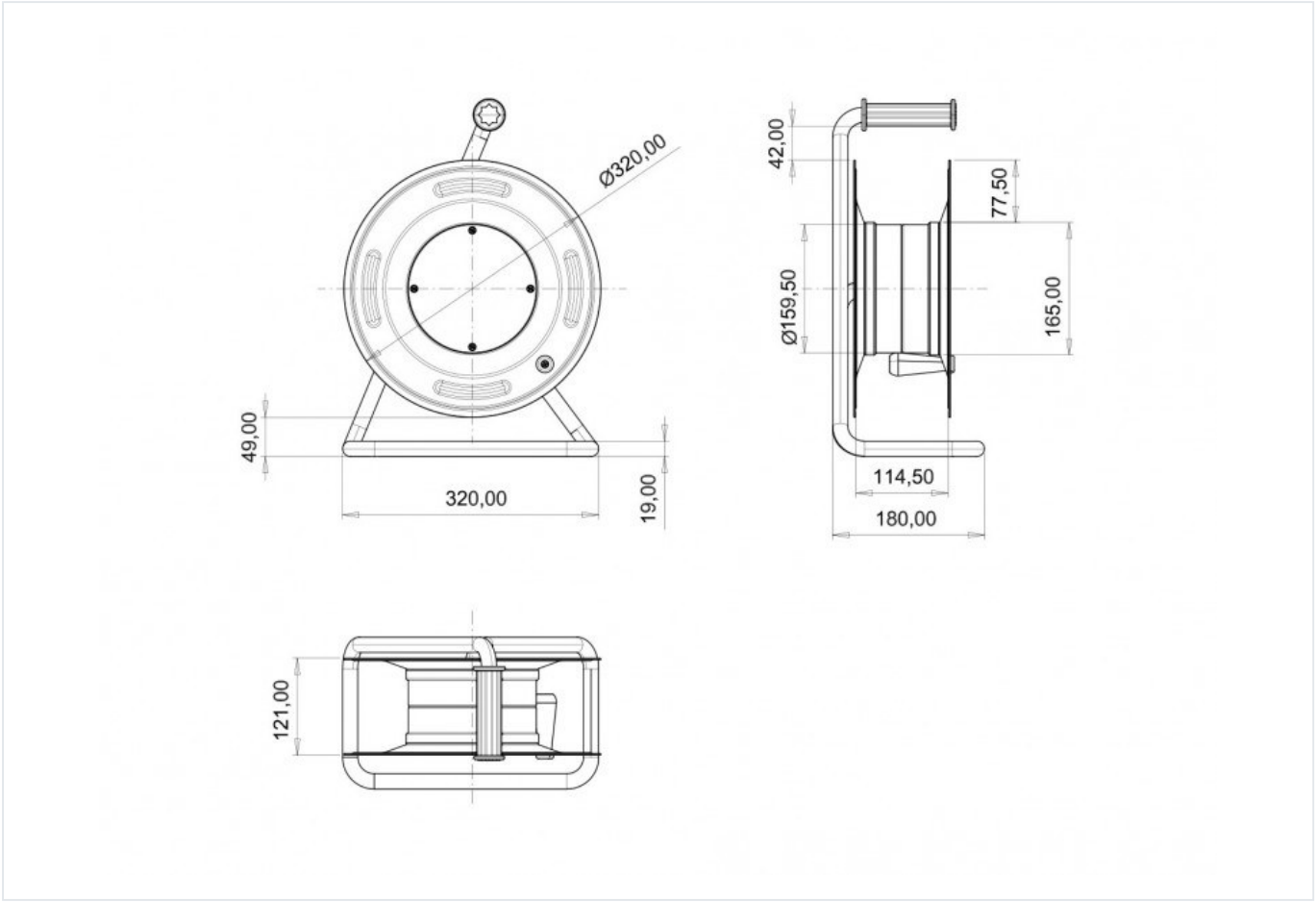

Technical values reflect the current product catalogue. Contact Bemis for installation documentation and confirmation of application suitability.