BC1-3102-2011

Industrial plug

Product code: BC1-3102-2011

IP rating **IP44**	Current (source notation) **32A**
Voltage **24V**	Poles **2P**



Specification	Value
Product code	BC1-3102-2011
Barcode	8698523910597
IP rating	IP44
Current (source notation)	32A
Voltage	24V
Frequency	50Hz - 60Hz
Poles	2P
Housing material	polyamide 6
Conductor material	MS 58
Weight (g)	132,4
Box quantity	10
Carton quantity	180

Technical drawing

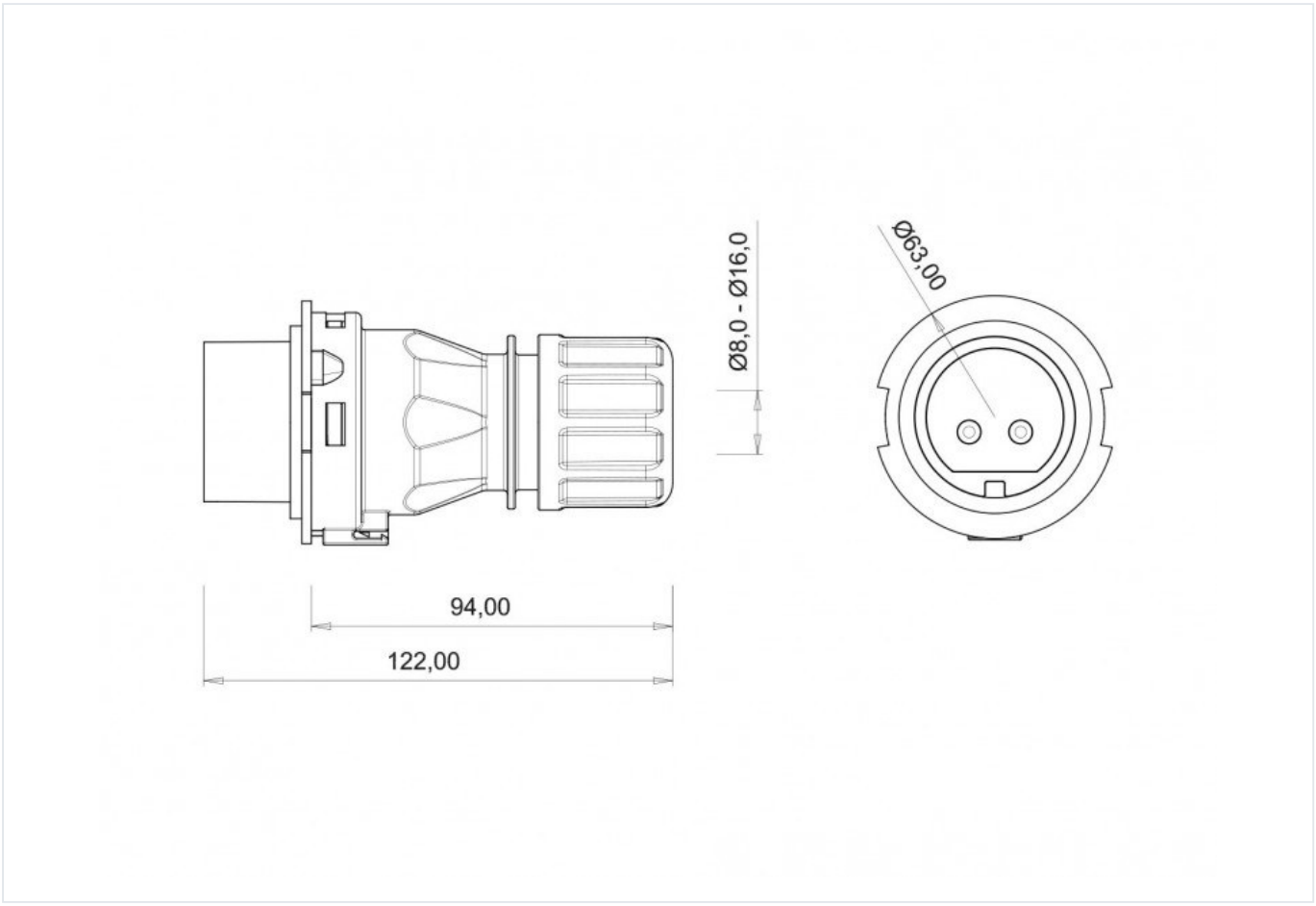

Technical values reflect the current product catalogue. Contact Bemis for installation documentation and confirmation of application suitability.