BC1-1103-7535

90° Wall socket

Product code: BC1-1103-7535

IP rating	Voltage
IP67	**24V**

Poles
3P



Specification	Value
Product code	BC1-1103-7535
Barcode	8698523910580
IP rating	IP67
Voltage	24V
Frequency	50Hz - 60Hz
Poles	3P
Housing material	polyamide 6
Conductor material	MS 58
Weight (g)	273
Box quantity	3
Carton quantity	54

Technical drawing

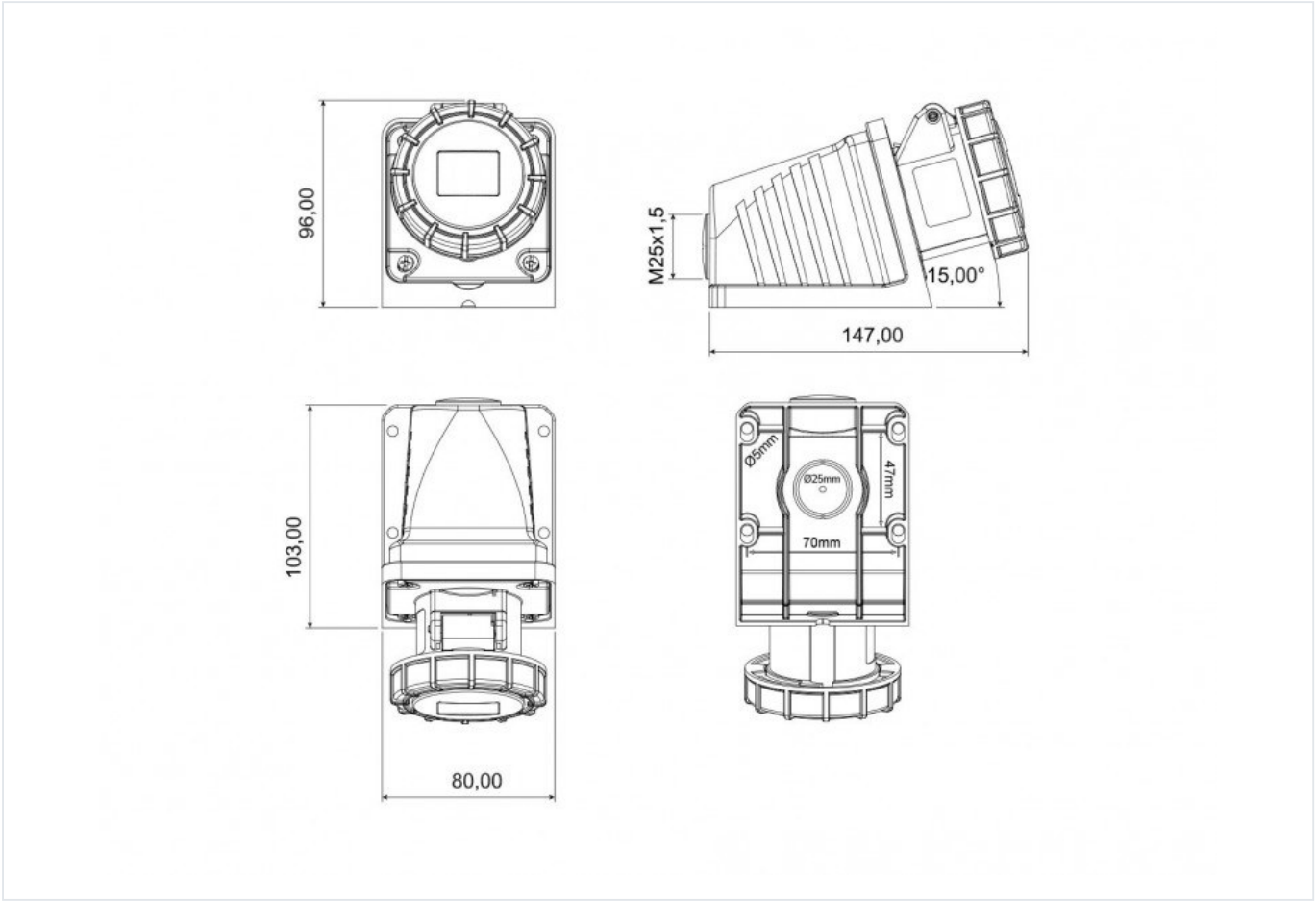

Technical values reflect the current product catalogue. Contact Bemis for installation documentation and confirmation of application suitability.