BC1-1103-7510

Wall socket

Product code: BC1-1103-7510

IP rating	Voltage
IP67	**24V**

Poles
3P



Specification	Value
Product code	BC1-1103-7510
Barcode	8698523910573
IP rating	IP67
Voltage	24V
Frequency	50Hz - 60Hz
Poles	3P
Housing material	polyamide 6
Conductor material	MS 58
Weight (g)	-
Box quantity	4
Carton quantity	72

Technical drawing

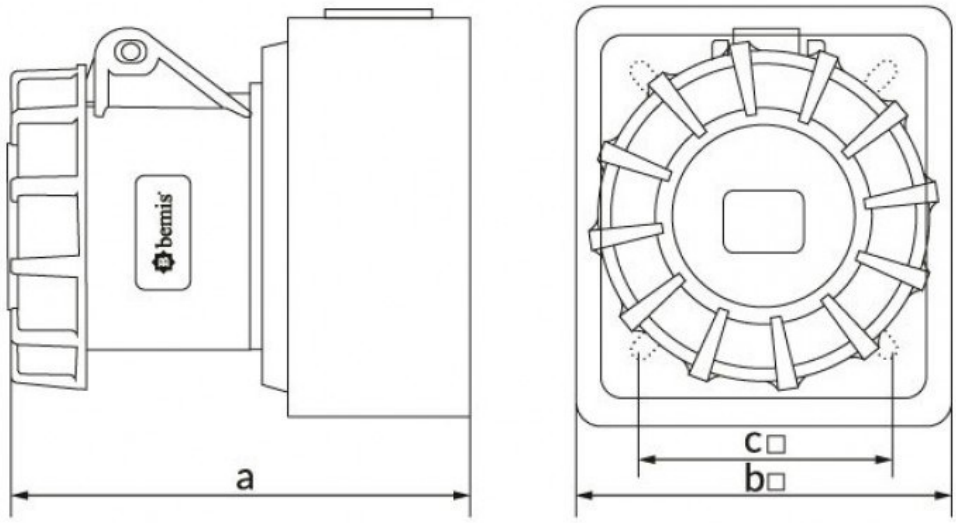

Ölçüler / Dimensions (mm)			
a	113	e	
b□	95	f	
c□	55	g	
d		h	

Technical values reflect the current product catalogue. Contact Bemis for installation documentation and confirmation of application suitability.