BC1-1103-7312

# Cable connector

Product code: BC1-1103-7312

| IP rating | Voltage |
|---|---|
| **IP67** | **24V** |

| Poles |
|---|
| **3P** |

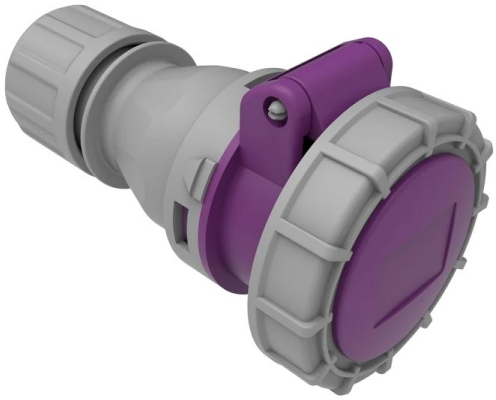

| Specification | Value |
|---|---|
| Product code | BC1-1103-7312 |
| Barcode | 8698523910542 |
| IP rating | IP67 |
| Voltage | 24V |
| Frequency | 50Hz - 60Hz |
| Poles | 3P |
| Housing material | polyamide 6 |
| Conductor material | MS 58 |
| Weight (g) | 157 |
| Box quantity | 8 |
| Carton quantity | 144 |

## Technical drawing

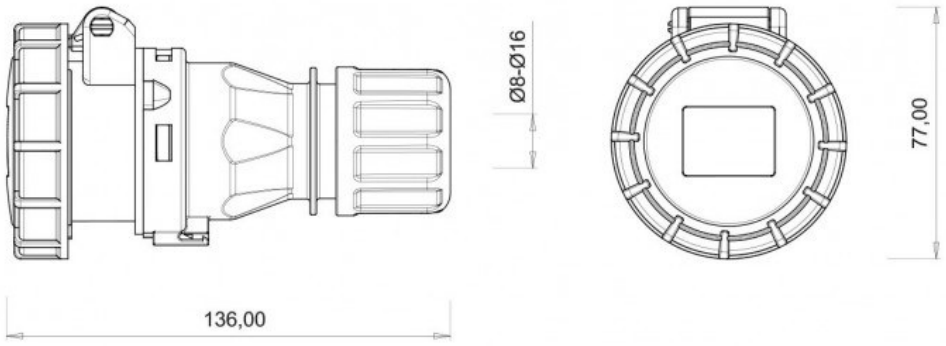


Technical values reflect the current product catalogue. Contact Bemis for installation documentation and confirmation of application suitability.