BC1-1103-2236

90° Wall inlet

Product code: BC1-1103-2236

IP rating	Voltage
IP44	**24V**

Poles
3P



Specification	Value
Product code	BC1-1103-2236
Barcode	8698523910443
IP rating	IP44
Voltage	24V
Frequency	50Hz - 60Hz
Poles	3P
Housing material	polyamide 6
Conductor material	MS 58
Weight (g)	211
Box quantity	6
Carton quantity	72

Technical drawing

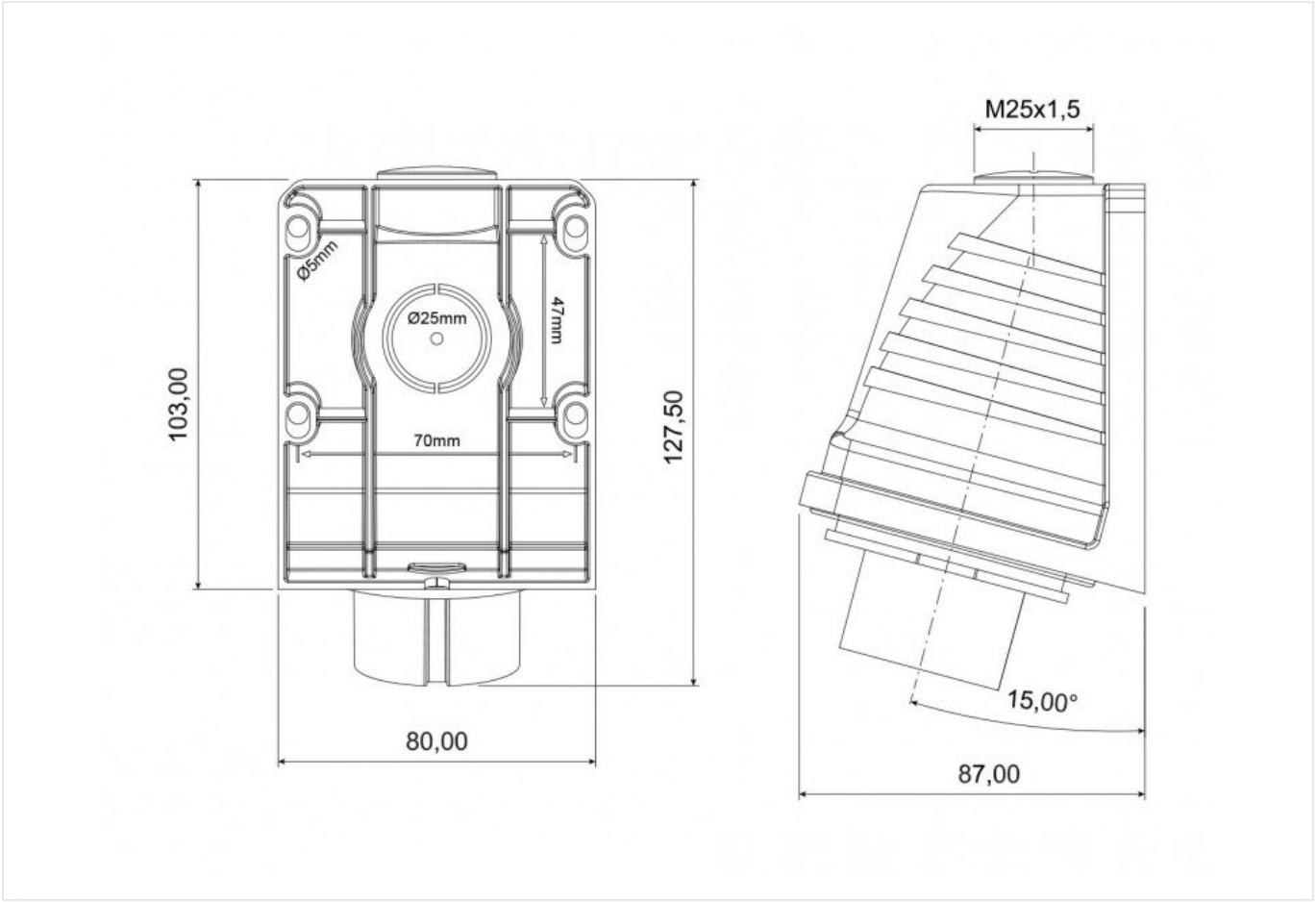

Technical values reflect the current product catalogue. Contact Bemis for installation documentation and confirmation of application suitability.