BC1-1102-7510

# Wall socket

Product code: BC1-1102-7510

| IP rating | Voltage |
|---|---|
| **IP67** | **24V** |

| Poles |
|---|
| **2P** |



| Specification | Value |
|---|---|
| Product code | BC1-1102-7510 |
| Barcode | 8698523910368 |
| IP rating | IP67 |
| Voltage | 24V |
| Frequency | 50Hz - 60Hz |
| Poles | 2P |
| Housing material | polyamide 6 |
| Conductor material | MS 58 |
| Weight (g) | 293 |
| Box quantity | 4 |
| Carton quantity | 72 |

## Technical drawing

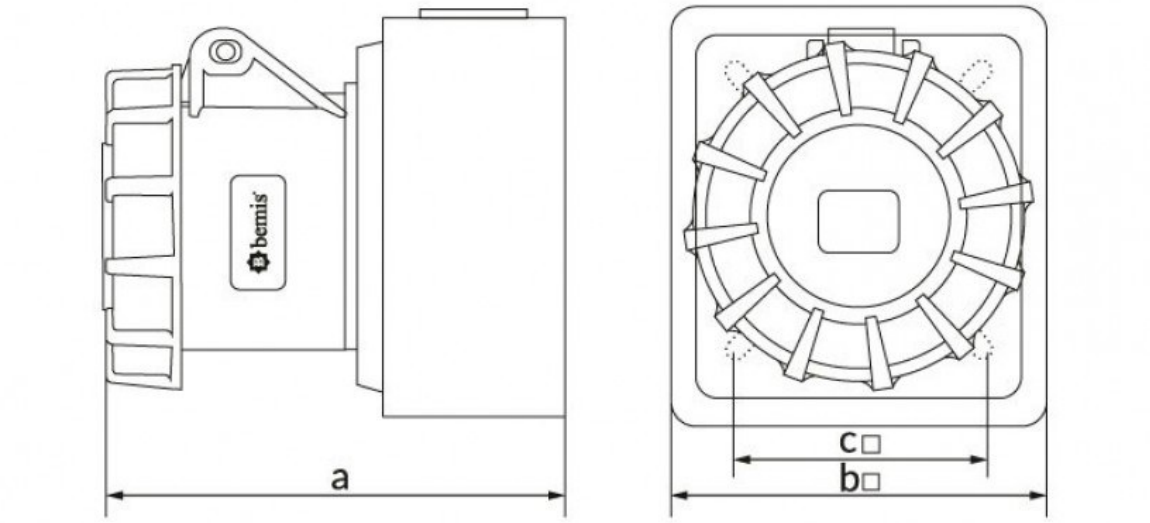


| Ölçüler / Dimensions (mm) | | | |
|---|---|---|---|
| a | 113 | e | |
| b□ | 95 | f | |
| c□ | 55 | g | |
| d | | h | |

Technical values reflect the current product catalogue. Contact Bemis for installation documentation and confirmation of application suitability.