BC1-1102-7413

Panel socket

Product code: BC1-1102-7413

IP rating	Voltage
IP67	**24V**

Poles
2P

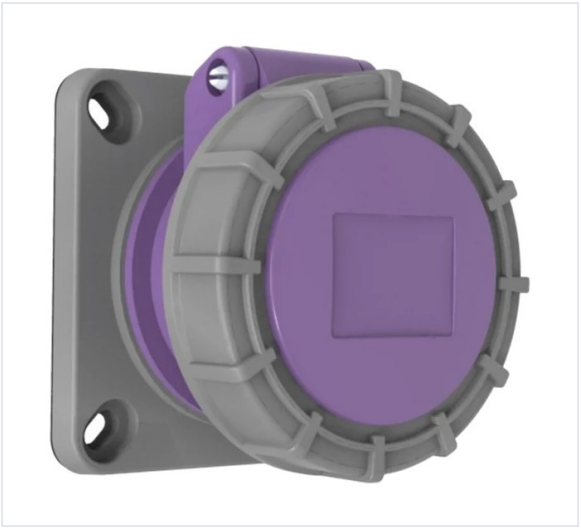

Specification	Value
Product code	BC1-1102-7413
Barcode	8698523910344
IP rating	IP67
Voltage	24V
Frequency	50Hz - 60Hz
Poles	2P
Housing material	polyamide 6
Conductor material	MS 58
Weight (g)	146
Box quantity	8
Carton quantity	144

Technical drawing

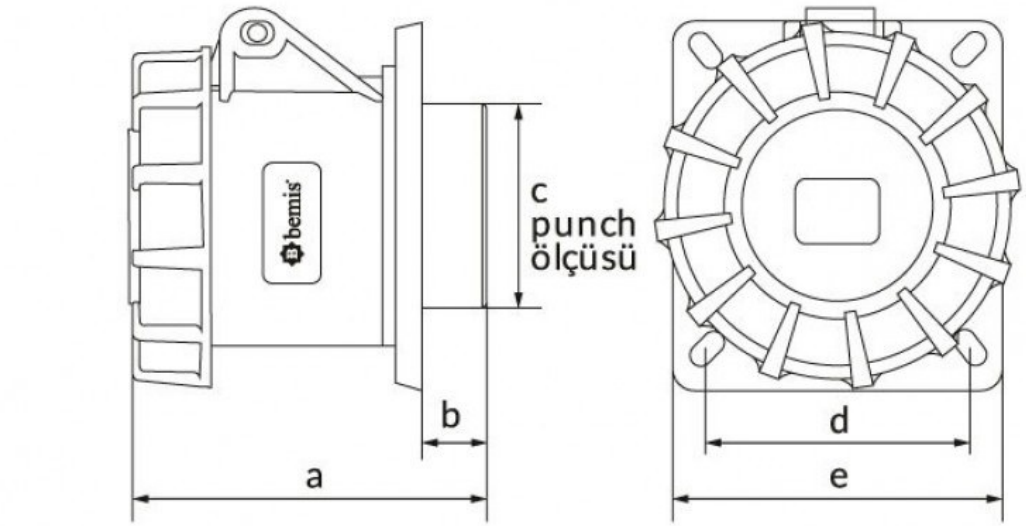

Ölçüler / Dimensions (mm)			
a	77	e	75
b	22	f	
c	40	g	
d	58	h	

Technical values reflect the current product catalogue. Contact Bemis for installation documentation and confirmation of application suitability.