BC1-1102-2535

90° Wall socket

Product code: BC1-1102-2535

IP rating	Voltage
IP44	**24V**

Poles
2P



Specification	Value
Product code	BC1-1102-2535
Barcode	8698523910948
IP rating	IP44
Voltage	24V
Frequency	50Hz - 60Hz
Poles	2P
Housing material	polyamide 6
Conductor material	MS 58
Weight (g)	193,4
Box quantity	3
Carton quantity	54

Technical drawing

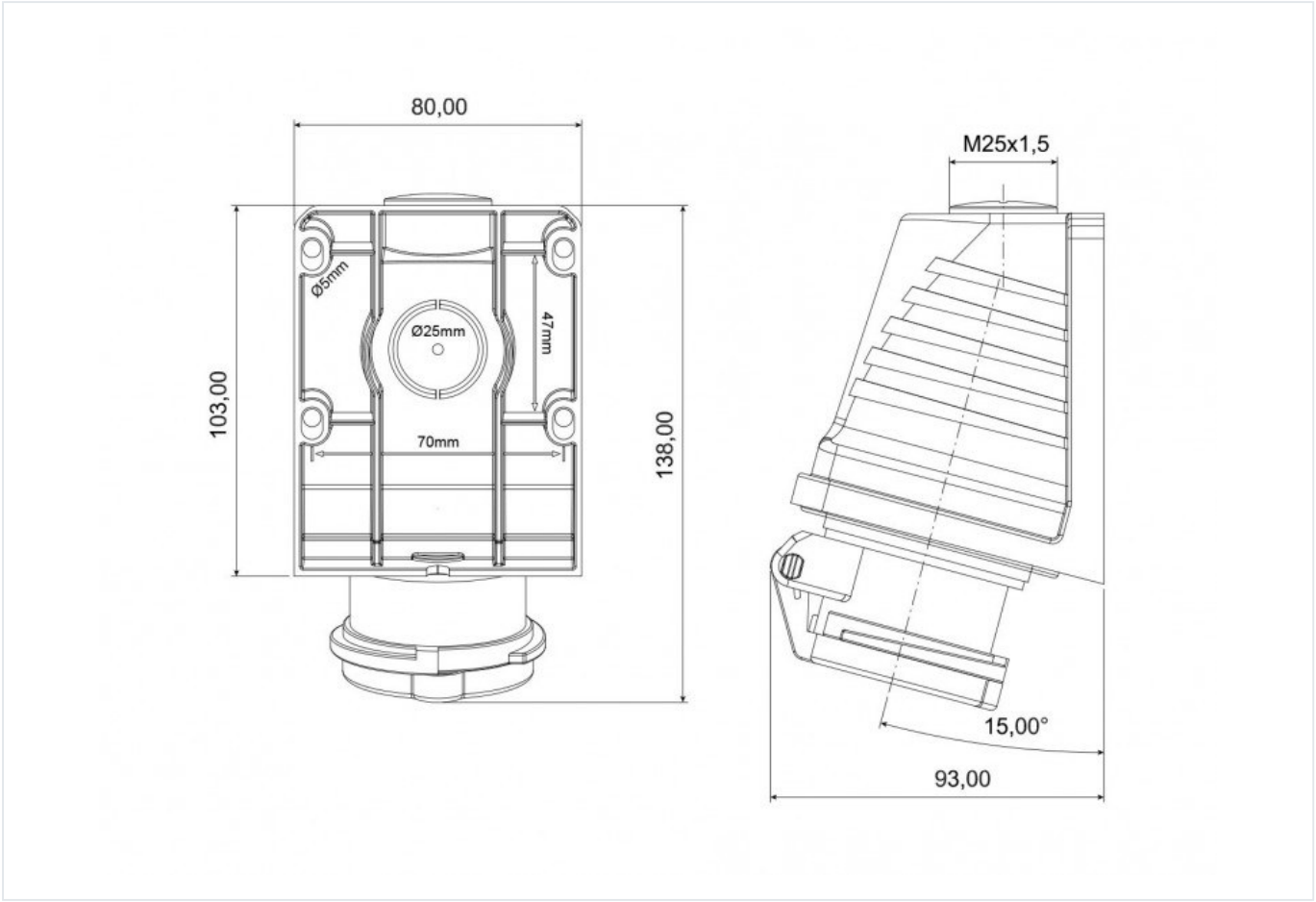

Technical values reflect the current product catalogue. Contact Bemis for installation documentation and confirmation of application suitability.