BC1-1102-2114

# Appliance inlet

Product code: BC1-1102-2114

IP rating
**IP44**

Voltage
**24V**

Poles
**2P**

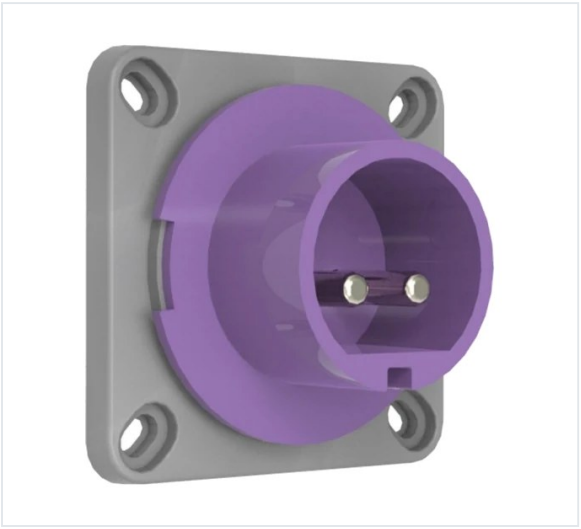

| Specification | Value |
|---|---|
| Product code | BC1-1102-2114 |
| Barcode | 8698523910870 |
| IP rating | IP44 |
| Voltage | 24V |
| Frequency | 50Hz - 60Hz |
| Poles | 2P |
| Housing material | polyamide 6 |
| Conductor material | MS 58 |
| Weight (g) | 96 |
| Box quantity | 10 |
| Carton quantity | 180 |

## Technical drawing

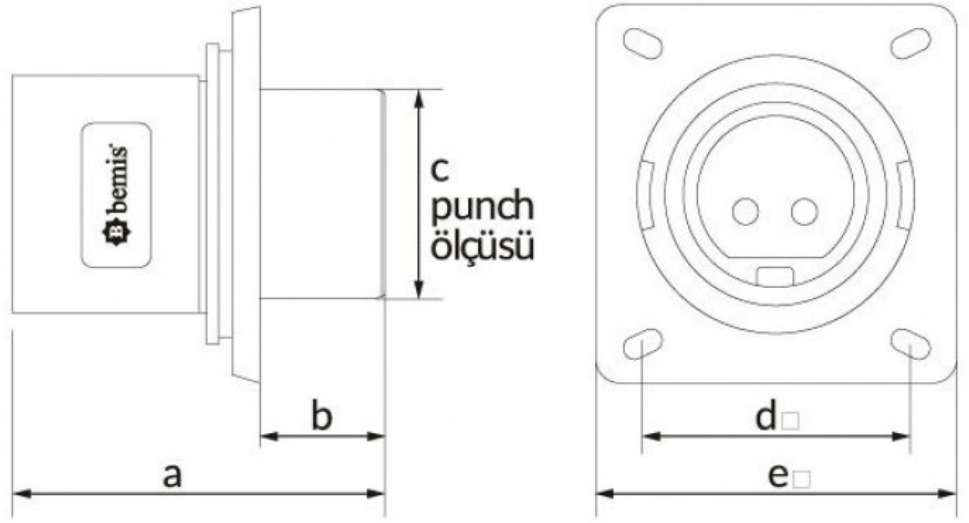


| Ölçüler / Dimensions (mm) | | | |
|---|---|---|---|
| a | 61,5 | e□ | 75 |
| b | 24 | f | |
| c | 40 | g | |
| d□ | 58 | h | |

Technical values reflect the current product catalogue. Contact Bemis for installation documentation and confirmation of application suitability.