BC1-6403-7413

Panel socket

Product code: BC1-6403-7413

IP rating	Current (source notation)
IP67	**125A**
Voltage	Poles
220V-250V	**2P+E**



Specification	Value
Product code	BC1-6403-7413
Barcode	8698523907795
IP rating	IP67
Current (source notation)	125A
Voltage	220V-250V
Frequency	50Hz - 60Hz
Poles	2P+E
Housing material	polyamide 6
Conductor material	MS 58
Weight (g)	-
Box quantity	1
Carton quantity	8

Technical drawing

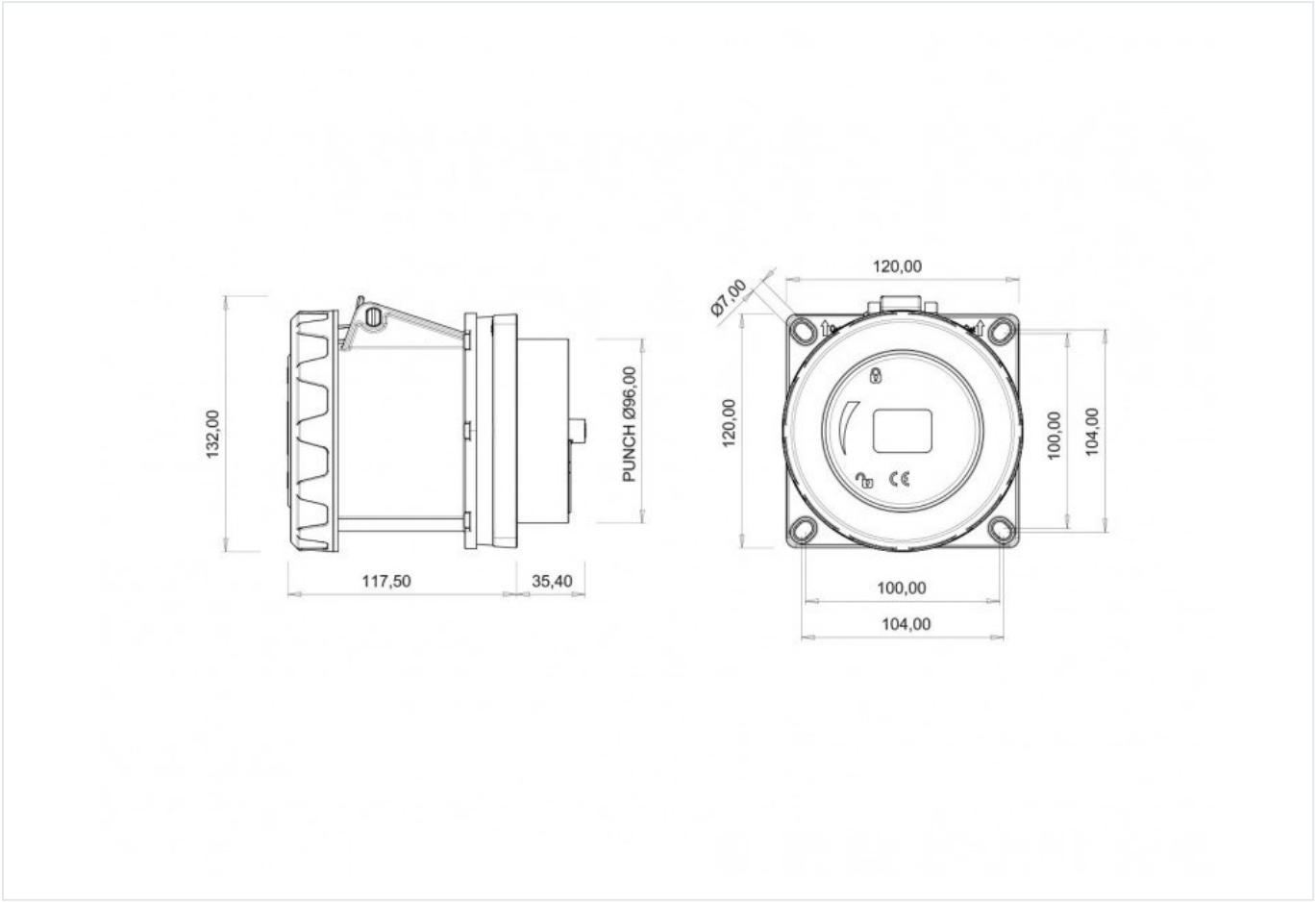

Technical values reflect the current product catalogue. Contact Bemis for installation documentation and confirmation of application suitability.