BC1-4403-7210

Wall inlet

Product code: BC1-4403-7210

IP rating	Current (source notation)
IP67	**63A**
Voltage	Poles
220V-250V	**2P+E**

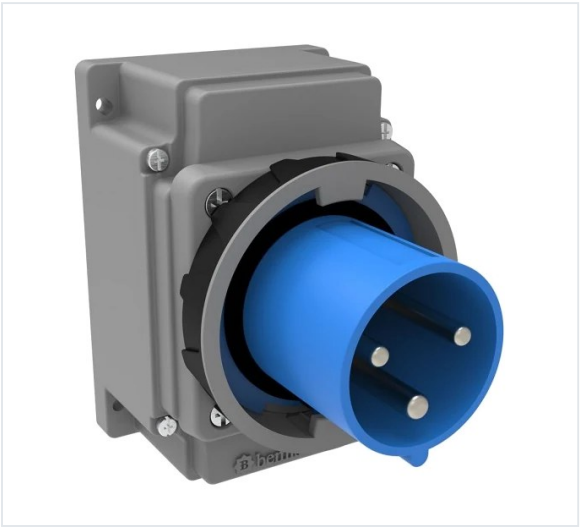

Specification	Value
Product code	BC1-4403-7210
Barcode	8698523904206
IP rating	IP67
Current (source notation)	63A
Voltage	220V-250V
Frequency	50Hz - 60Hz
Poles	2P+E
Housing material	polyamide 6
Conductor material	MS 58
Weight (g)	-
Box quantity	1
Carton quantity	12

Technical drawing

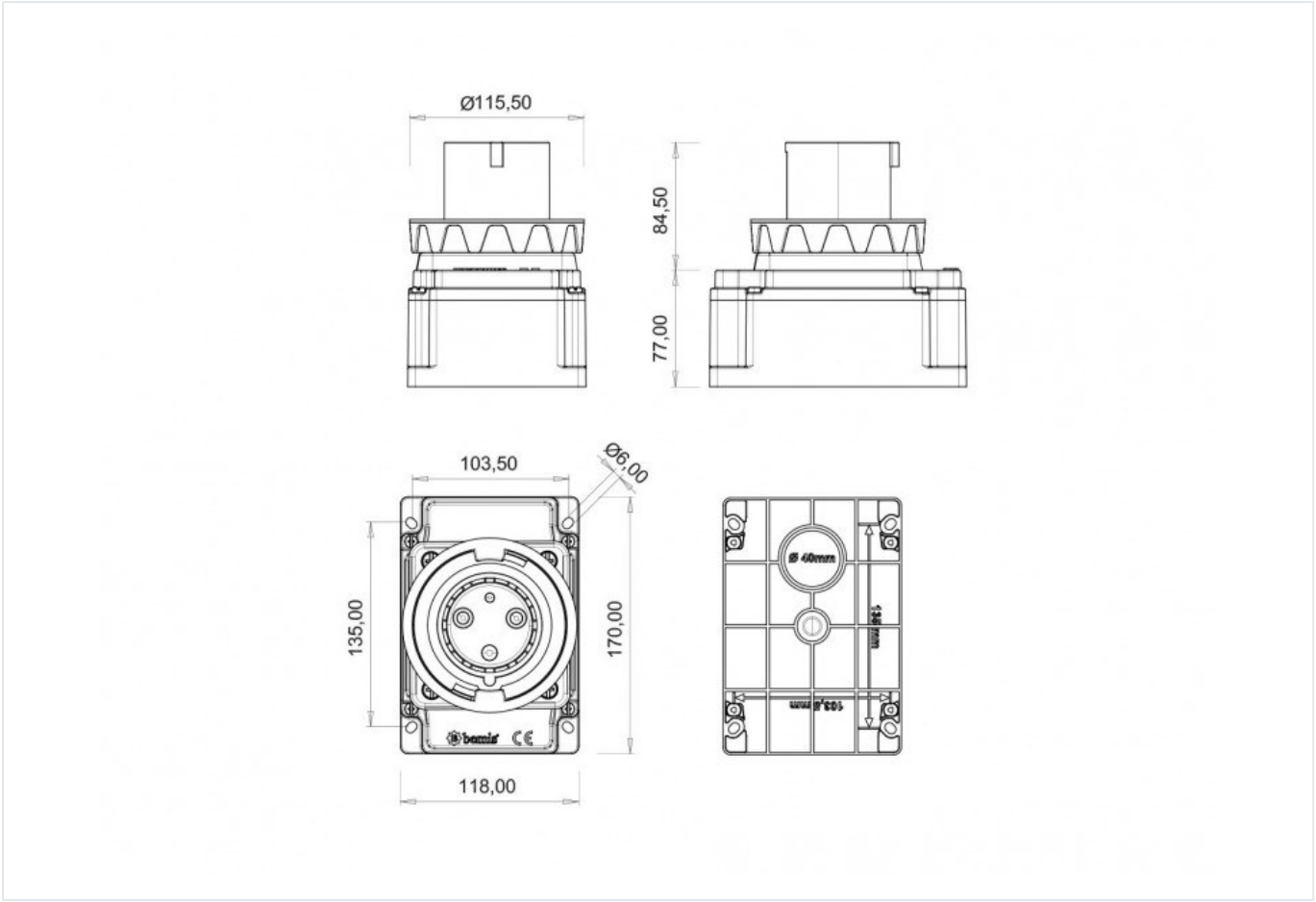

Technical values reflect the current product catalogue. Contact Bemis for installation documentation and confirmation of application suitability.