BC1-4403-7535

90° Wall socket

Product code: BC1-4403-7535

IP rating	Current (source notation)
IP67	**63A**
Voltage	**Poles**
220V-250V	**2P+E**



Specification	Value
Product code	BC1-4403-7535
Barcode	8698523903308
IP rating	IP67
Current (source notation)	63A
Voltage	220V-250V
Frequency	50Hz - 60Hz
Poles	2P+E
Housing material	polyamide 6
Conductor material	MS 58
Weight (g)	918
Box quantity	1
Carton quantity	12

Technical drawing

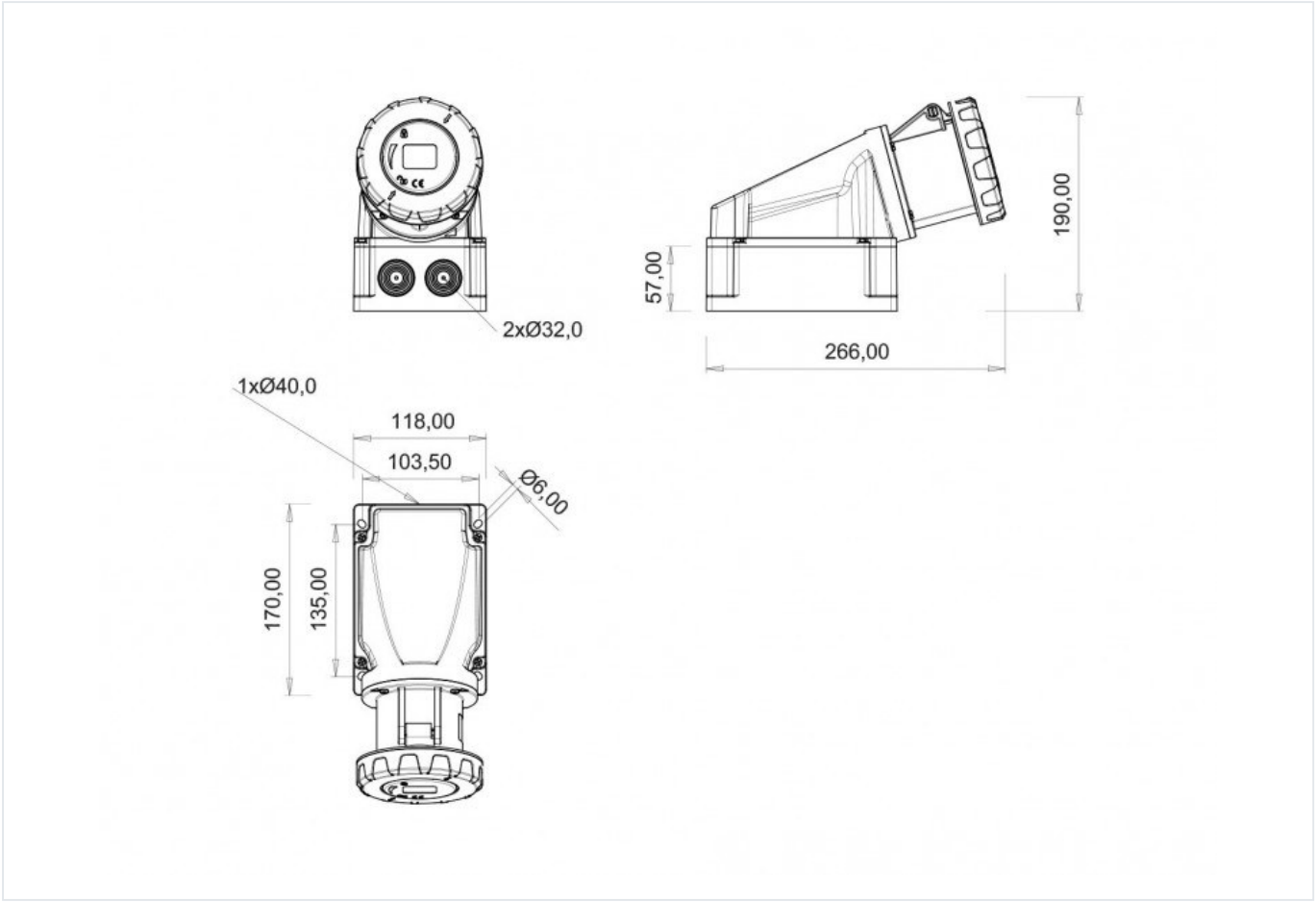

Technical values reflect the current product catalogue. Contact Bemis for installation documentation and confirmation of application suitability.