BM2-3103-0000

Metal cable reel

Product code: BM2-3103-0000

IP rating **IP44**	Socket option **with sockets**
Cable option **without cable**	Cable type **3x1,5mm**



Specification	Value
Product code	BM2-3103-0000
Barcode	8698523902554
IP rating	IP44
Housing material	0,8mm cold-rolled steel sheet
Socket option	with sockets
Cable option	without cable
Cable capacity	50m. cable capacity
Cable type	3x1,5mm
Weight (g)	1949
Box quantity	1
Carton quantity	1

Technical drawing

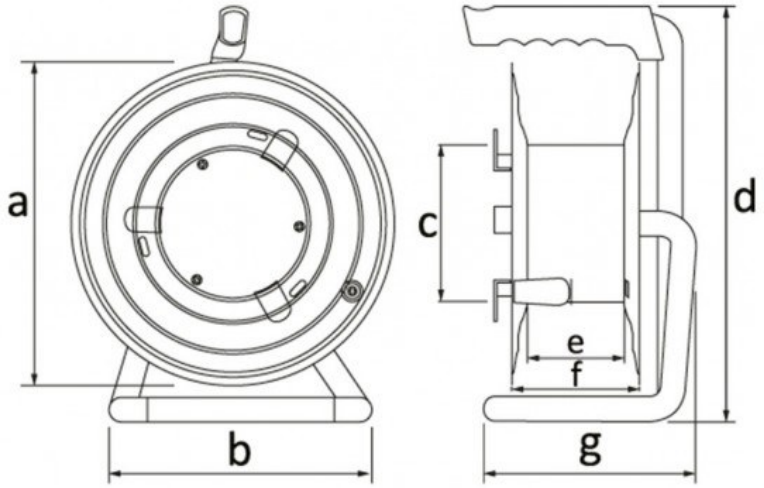

Ölçüler / Dimensions (mm)			
a	290	e	75
b	270	f	110
c	130	g	175
d	380	h	

Technical values reflect the current product catalogue. Contact Bemis for installation documentation and confirmation of application suitability.