BC1-4303-2535

90° Wall socket

Product code: BC1-4303-2535

IP rating **IP44**	Current (source notation) **63A**
Voltage **110V-150V**	Poles **2P+E**



Specification	Value
Product code	BC1-4303-2535
Barcode	8698523905357
IP rating	IP44
Current (source notation)	63A
Voltage	110V-150V
Frequency	50Hz - 60Hz
Poles	2P+E
Housing material	polyamide 6
Conductor material	MS 58
Weight (g)	-
Box quantity	1
Carton quantity	12

Technical drawing

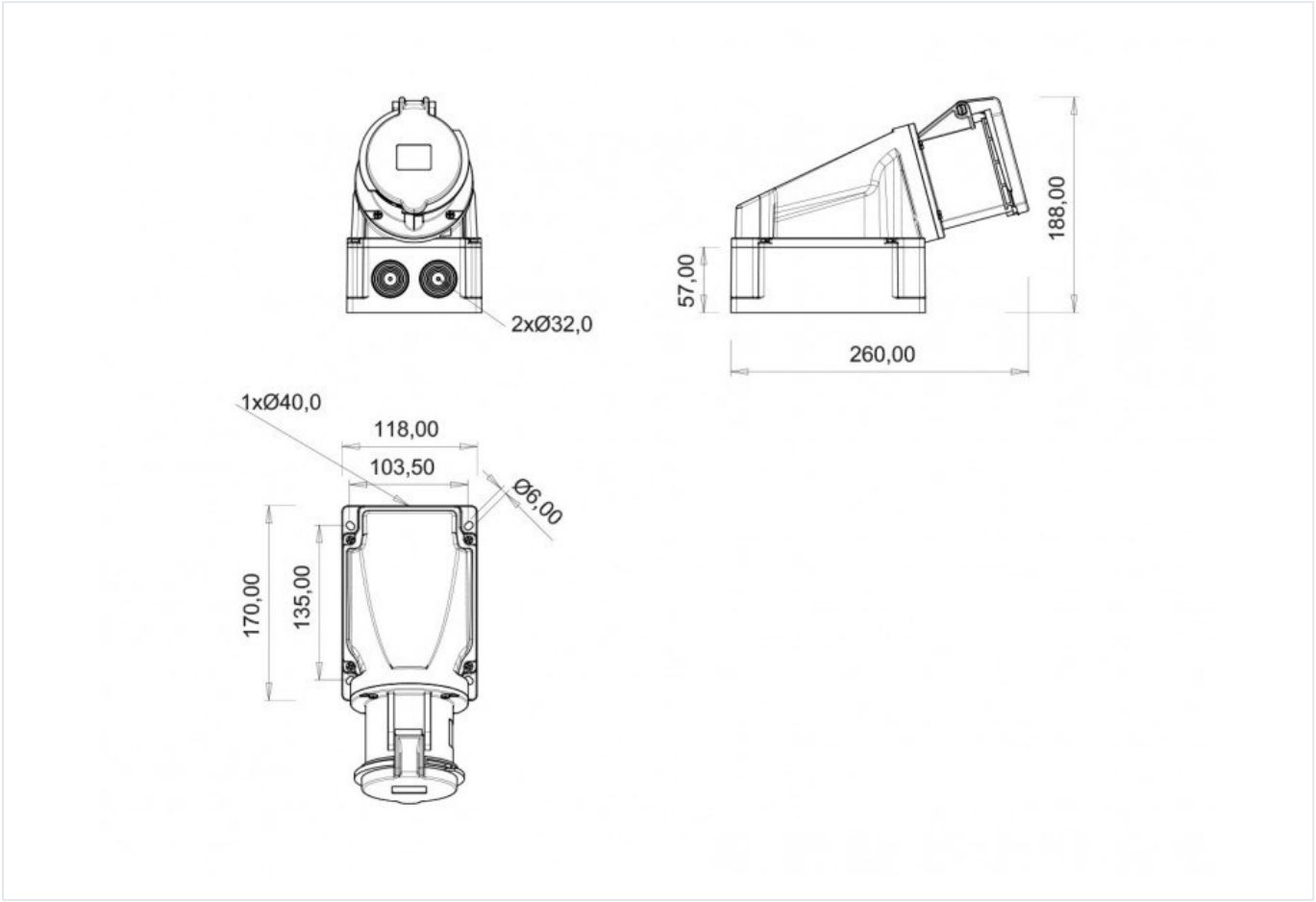

Technical values reflect the current product catalogue. Contact Bemis for installation documentation and confirmation of application suitability.