BC1-4303-2420

45° Panel socket

Product code: BC1-4303-2420

IP rating **IP44**	Current (source notation) **63A**
Voltage **110V-150V**	Poles **2P+E**



Specification	Value
Product code	BC1-4303-2420
Barcode	8698523900390
IP rating	IP44
Current (source notation)	63A
Voltage	110V-150V
Frequency	50Hz - 60Hz
Poles	2P+E
Housing material	polyamide 6
Conductor material	MS 58
Weight (g)	430
Box quantity	1
Carton quantity	24

Technical drawing

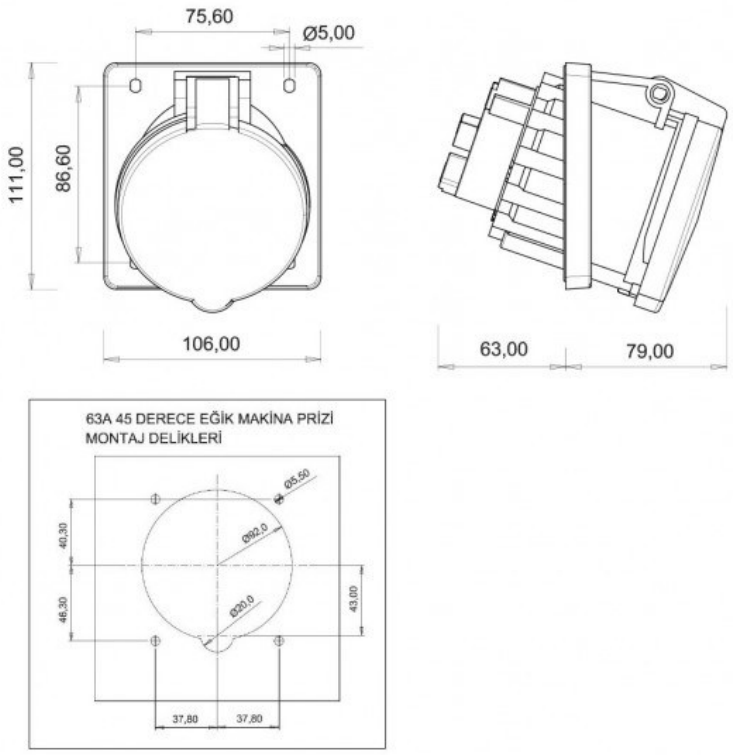

Technical values reflect the current product catalogue. Contact Bemis for installation documentation and confirmation of application suitability.