BC1-3505-7060

Wall inlet — 90° — phase reversing

Product code: BC1-3505-7060

IP rating	Current (source notation)
IP67	**32A**



Specification	Value
Product code	BC1-3505-7060
Barcode	8698523904930
IP rating	IP67
Current (source notation)	32A
Voltage	380V-450V
Frequency	50Hz - 60Hz
Poles	3P+E+N
Housing material	polyamide 6
Conductor material	MS 58
Weight (g)	387
Box quantity	3
Carton quantity	54

Technical drawing

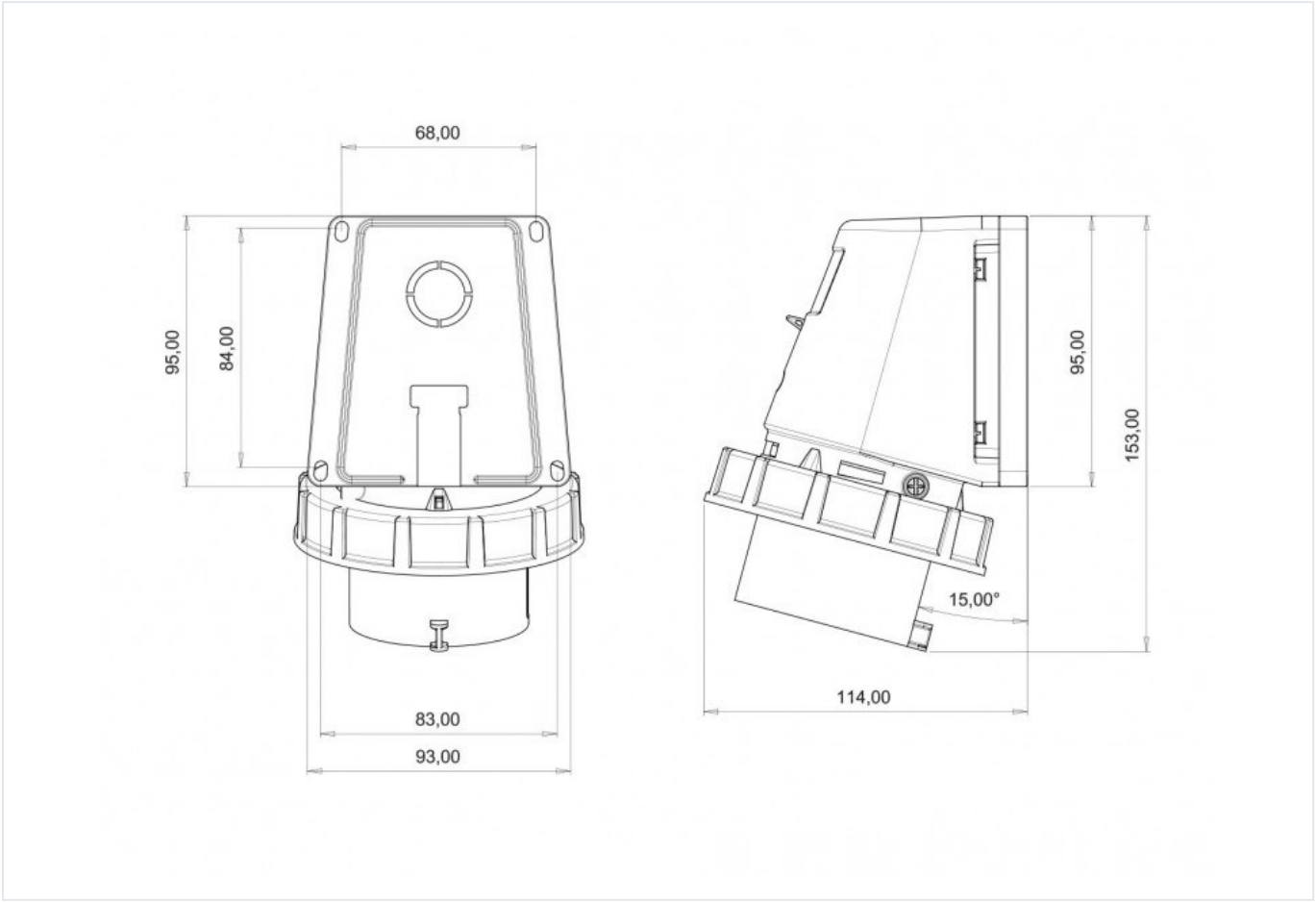

Technical values reflect the current product catalogue. Contact Bemis for installation documentation and confirmation of application suitability.