BC1-3505-2236

90° Wall inlet

Product code: BC1-3505-2236

IP rating **IP44**	Current (source notation) **32A**
Voltage **380V-450V**	Poles **3P+E+N**



Specification	Value
Product code	BC1-3505-2236
Barcode	8698523902356
IP rating	IP44
Current (source notation)	32A
Voltage	380V-450V
Frequency	50Hz - 60Hz
Poles	3P+E+N
Housing material	polyamide 6
Conductor material	MS 58
Weight (g)	306,2
Box quantity	3
Carton quantity	54

Technical drawing

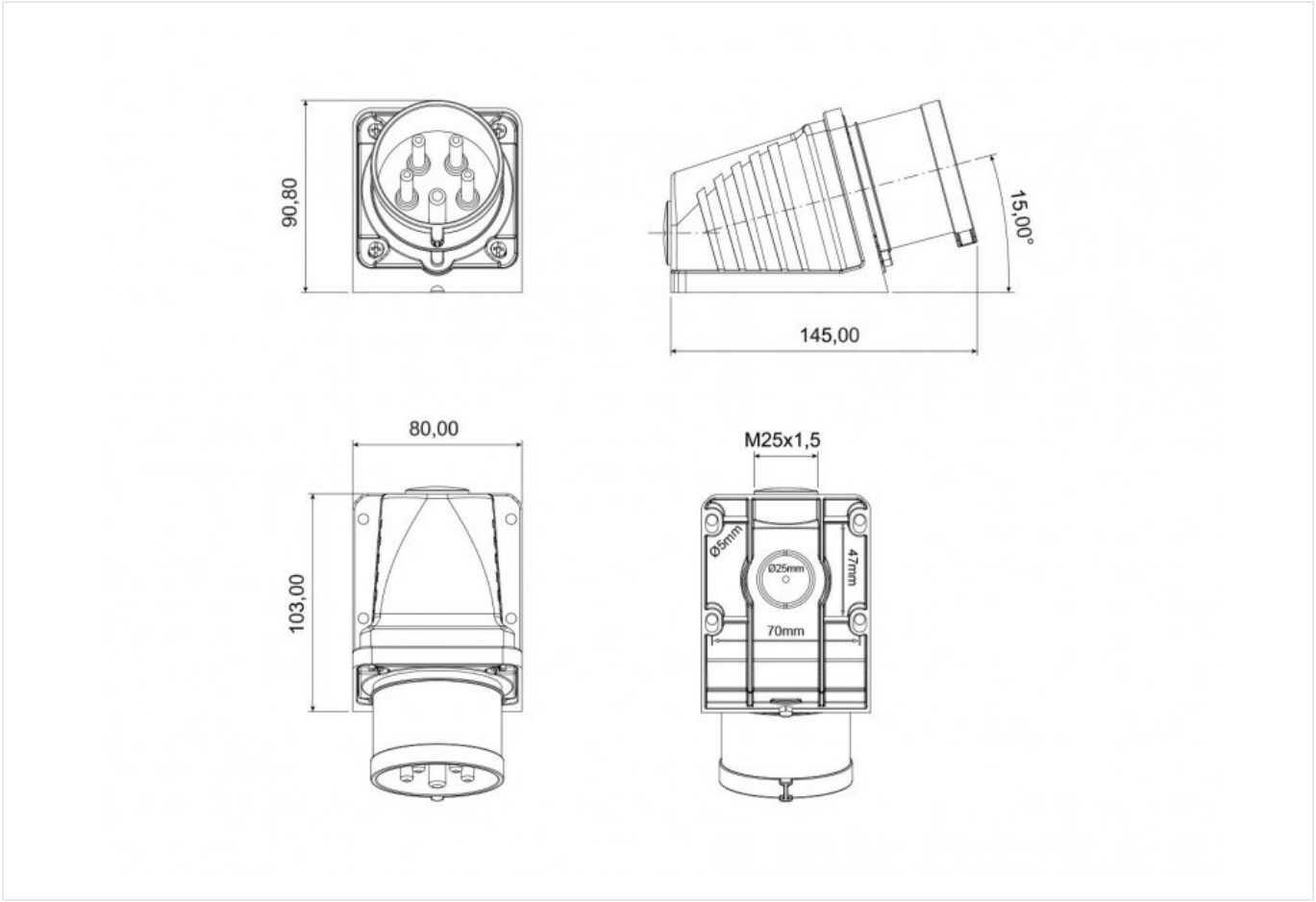

Technical values reflect the current product catalogue. Contact Bemis for installation documentation and confirmation of application suitability.